Babendure Design Group
8140 Walnut Hill Ln. #950
Dallas, Texas 75231
214.265.1960
www.babendure.com

University Medical Center of El Paso
El Paso Children's

8th Floor Build Out - Contract Drawings
Package 2 of 3

June 12, 2024

Signage & Wayfinding
Design Specialists

TABLE OF CONTENTS

Color Standards 3
Typography Standards 5
Symbol Standards. 6

INT.101.3 Building Directory, Large 7
INT.102.1 Elevator Directory, Small 11
INT.102.2 Elevator Directory, Medium 14
INT.103.1 Wall Directional, Extra-Small 19
INT.103.2 Wall Directional, Small 22
INT.104.1 Overhead Directional, 1-Line Suspended 25
INT.104.3 Overhead Directional, 2-Line Suspended 28
INT.104.5 Overhead Directional, 2-Line Suspended Small 31
INT.105 Typical Room Identity 34
INT.108.2 Patient Room Identity, Child. 37
INT.109 Restroom Identity 40
INT.112 Stair Corridor Identity 43
INT.113 Stairwell Identity 46
INT.114.1 Notice Posting, Small. 49
INT.114.2 Notice Posting, Medium 52
INT.115.1 Flag Identity, Small, Wall Mounted 55
INT.115.2 Flag Identity, Small, Hanging 59

SPECIAL ELEVATIONS

Special Elevations 1 63
Special Elevations 2 64
Special Elevations 3 65
Special Elevations 4 66

BUILDING DIRECTORY LAYOUT

Building Directory 68
Children’s Replacement Panels. 68

Babendure Design Group
8140 Walnut Hill Ln. #950
Dallas, Texas 75231
214.265.1960
www.babendure.com

University Medical Center of El Paso
El Paso Children’s

8th Floor Build Out
Contract Drawings

Date	Issued
06.12.24	For Bid

Design Intent Drawings

©Babendure Design Group. All rights reserved. No part of this document may be reproduced or utilized in any form without prior written authorization from Babendure Design Group. This document serves as a device to communicate design intent only. Fabrication and installation of all products represented herein will be derived from the shop drawings produced by the project’s contracted fabricator.

PAINT COLORS

P-1	Brown	Matthews MP12222	Satin Finish
P-2	Cream	Matthews MP07148	Satin Finish
P-3	White	Matthews MP11477	Satin Finish
P-4	Black	Matthews MP31631	Satin Finish
P-5	Red	Matthews MP12019	Satin Finish
P-6	Yellow	Matthews MP01370	Satin Finish
P-7	Orange	Matthews MP12601	Satin Finish
P-8	Blue	Matthews MP10452	Satin Finish
P-9	Green	Matthews MP13543	Satin Finish
P-10	Purple	Matthews MP00292	Satin Finish
P-11	Light Gray	Matthews MP02650 Garbo Silver	Satin Finish
P-12	Dark Gray	Matthews MP04761 Steel Wool	Satin Finish
P-13	Silver	Matthews MP30136	Satin Finish
P-14	Fleck Silver	Matthews N953SP Super Sparkle Silver	Satin Finish
P-15	Aqua	Visually match Pantone 563 C	Satin Finish
P-16	Light Orange	Visually match Pantone 142 C	Satin Finish
P-17	Medium Orange	Visually match Pantone 144 C	Satin Finish
P-18	Dark Orange	Visually match Pantone 159 C	Satin Finish
P-19	Light Purple	Visually match Pantone 5285 C	Satin Finish

P-20	Exterior Black	Matthews MP30132	Semi-Gloss Finish
P-21	Exterior White	Matthews MP11477	Semi-Gloss Finish
P-22	Exterior Silver	Matthews MP30136	Semi-Gloss Finish
P-23	Exterior Red	Matthews MP12019	Semi-Gloss Finish
P-24	Exterior Bronze	Matthews MP20190 Duronodic 313 Metallic	Semi-Gloss Finish

P-30	Children's Purple	Matthews MP09431 Working Blue	Semi-Gloss Finish
P-31	Children's Red	Matthews MP06893 Chinese Pagoda	Semi-Gloss Finish
P-32	Children's Yellow	Matthews MP01347 Honeyglow	Semi-Gloss Finish
P-33	Frame Silver	Matthews MP33172	Satin Finish
P-34	Dark Purple	Visually match Pantone 5265 C	Satin Finish
P-35	Level B	Benjamin Moore 2170-50	Satin Finish

PAINT COLORS

P-36	Levels 2, 4, 5	Benjamin Moore OC-62	Satin Finish
P-37	Level 6	Benjamin Moore 2166-70	Satin Finish
P-38	Level 7	Benjamin Moore 2066-60	Satin Finish
P-39	Level 8	Matthews MP11477	Satin Finish
P-40	Level 9	Benjamin Moore 2147-50	Satin Finish
P-41	Level 10	Benjamin Moore 2153-60	Satin Finish
P-42	Level 1	Benjamin Moore 2155-50	Satin Finish

Babendure Design Group
8140 Walnut Hill Ln. #950
Dallas, Texas 75231
214.265.1960
www.babendure.com

University Medical Center of El Paso
El Paso Children's

8th Floor Build Out
Contract Drawings

Date	Issued
06.12.24	For Bid

Design Intent Drawings

©Babendure Design Group. All rights reserved. No part of this document may be reproduced or utilized in any form without prior written authorization from Babendure Design Group. This document serves as a device to communicate design intent only. Fabrication and installation of all products represented herein will be derived from the shop drawings produced by the project's contracted fabricator.

Color Standards

INK COLORS

I-1	Brown	Visually match Pantone Warm Gray 11 C
I-2	Cream	Visually match Pantone Warm Gray 2 C
I-3	White	Standard White
I-4	Black	Visually match Pantone Black C
I-5	Red	Visually match Pantone 1805 C
I-6	Yellow	Visually match Pantone 106 C
I-7	Orange	Visually match Pantone 166 C
I-8	Blue	Visually match Pantone 294 C
I-9	Green	Visually match Pantone 348 C
I-10	Purple	Visually match Pantone 254 C
I-11	Light Gray	Visually match Pantone Cool Gray 2 C
I-12	Dark Gray	Visually match Pantone Cool Gray 11 C
I-13	Pale Purple	Visually match Pantone 5275 C

VINYL COLORS

V-1	Black	3M Scotchcal 7725-22 Matte Black	Opaque
V-2	White	3M Scotchcal 7725-10 White	Opaque
V-3	Red	3M Scotchcal 7725-63 Geranium Red	Opaque
V-4	Blue	3M Scotchcal 7725-17 Vivid Blue	Opaque
V-5	Satin Aluminum	3M Scotchcal 7725-120 Satin Aluminum	Opaque
V-6	Children's Purple	3M Scotchcal 7725-38 Royal Purple	Opaque
V-7	Children's Red	3M Scotchcal 7725-263 Perfect Match Red	Opaque
V-8	Children's Yellow	3M Scotchcal 7725-25 Sunflower	Opaque

V-20	Reflective White	3M Scotchlite 680-10 White	Reflective
V-21	Reflective Red	3M Scotchlite 680-72 Red	Reflective
V-22	Reflective Blue	3M Scotchlite 680-75 Blue	Reflective

V-30	Translucent White	3M Scotchcal 3630-20 White	Translucent
V-31	Translucent Red	3M Scotchcal 3630-73 Dark Red	Translucent
V-32	Black Dual Color Film	3M Scotchcal 3635-222 Dual-Color Film Black	Translucent

Babendure Design Group
8140 Walnut Hill Ln. #950
Dallas, Texas 75231
214.265.1960
www.babendure.com

University Medical Center of El Paso
El Paso Children's

8th Floor Build Out
Contract Drawings

Date	Issued
06.12.24	For Bid

Design Intent Drawings

©Babendure Design Group. All rights reserved. No part of this document may be reproduced or utilized in any form without prior written authorization from Babendure Design Group. This document serves as a device to communicate design intent only. Fabrication and installation of all products represented herein will be derived from the shop drawings produced by the project's contracted fabricator.

Color Standards (Continued)

PROJECT FONTS

ABCDEFGHIJKLMNOPQRSTUVWXYZ
abcdefghijklmnopqrstuvwxyz
1234567890

ITC Franklin Gothic Std Book Condensed

ABCDEFGHIJKLMNOPQRSTUVWXYZ
abcdefghijklmnopqrstuvwxyz
1234567890

ITC Franklin Gothic Std Medium Condensed

ABCDEFGHIJKLMNOPQRSTUVWXYZ
abcdefghijklmnopqrstuvwxyz
1234567890

ITC Franklin Gothic Std Demi Condensed

ABCDEFGHIJKLMNOPQRSTUVWXYZ
abcdefghijklmnopqrstuvwxyz
1234567890

Myriad Pro SemiCondensed

ABCDEFGHIJKLMNOPQRSTUVWXYZ
abcdefghijklmnopqrstuvwxyz
1234567890

Myriad Pro Semibold SemiCondensed

ABCDEFGHIJKLMNOPQRSTUVWXYZ
abcdefghijklmnopqrstuvwxyz
1234567890

Adobe Garamond Pro Bold

PROJECT FONTS

ABCDEFGHIJKLMNOPQRSTUVWXYZ
abcdefghijklmnopqrstuvwxyz
1234567890

Chalkboard Bold

B D G

Babendure Design Group
8140 Walnut Hill Ln. #950
Dallas, Texas 75231
214.265.1960
www.babendure.com

University Medical Center of El Paso
El Paso Children's

8th Floor Build Out
Contract Drawings

Date	Issued
06.12.24	For Bid

Design Intent Drawings

©Babendure Design Group. All rights reserved. No part of this document may be reproduced or utilized in any form without prior written authorization from Babendure Design Group. This document serves as a device to communicate design intent only. Fabrication and installation of all products represented herein will be derived from the shop drawings produced by the project's contracted fabricator.

Typography Standards

PROJECT SYMBOLS

Project Arrows

Restrooms

Accessible Parking

Parking

Do Not Enter
(Light Background)

Do Not Enter
(Dark Background)

No Smoking

No Firearms

Surveillance Cameras

Information

Magnet Warning

Notice

Radiation
(Purple on Yellow Field)

Biohazard
(Black on Orange Field)

Elevator

Vending

Gift Shop

Cashier

Cafeteria

Chapel

Coffee Shop

Babendure Design Group
8140 Walnut Hill Ln. #950
Dallas, Texas 75231
214.265.1960
www.babendure.com

University Medical Center of El Paso
El Paso Children's

8th Floor Build Out
Contract Drawings

Date	Issued
06.12.24	For Bid

Design Intent Drawings

©Babendure Design Group. All rights reserved. No part of this document may be reproduced or utilized in any form without prior written authorization from Babendure Design Group. This document serves as a device to communicate design intent only. Fabrication and installation of all products represented herein will be derived from the shop drawings produced by the project's contracted fabricator.

Symbol Standards

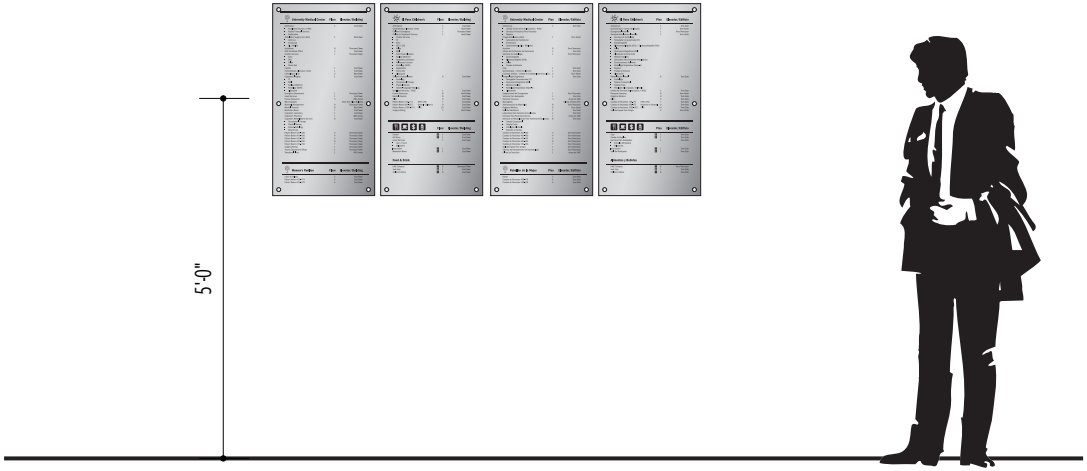

1 **INT.101.3 Building Directory, Large**

Scale: 3/8"=1'-0"

For the 8th Floor Build Out project, fabricator to replace lexan insert in existing structures.

1. 1/4" clear acrylic with flame polished edges. Entire assembly puck-mounted flush to wall.
2. 3/4" diameter mounting pucks in satin aluminum finish.
3. 1/16" clear lexan with first-surface screen printed text, symbols and 1/16" rule lines to match P-4 Black.
4. .040 thick Wrisco Clear Satin Anodized Aluminum (or approved equal) laminated to 1/8" pre-finished matte black P-95 acrylic. All edges to be sanded smooth.
5. Font: ITC Franklin Gothic Std Demi Condensed.
6. Font: ITC Franklin Gothic Std Book Condensed.

   Designer to provide artwork for layout.

   Fabricator to field verify each location prior to fabrication.

Babendure Design Group
8140 Walnut Hill Ln. #950
Dallas, Texas 75231
214.265.1960
www.babendure.com

University Medical Center of El Paso
El Paso Children's

8th Floor Build Out
Contract Drawings

Date	Issued
06.12.24	For Bid

Design Intent Drawings

©Babendure Design Group. All rights reserved. No part of this document may be reproduced or utilized in any form without prior written authorization from Babendure Design Group. This document serves as a device to communicate design intent only. Fabrication and installation of all products represented herein will be derived from the shop drawings produced by the project's contracted fabricator.

INT.101.3
Building Directory, Large

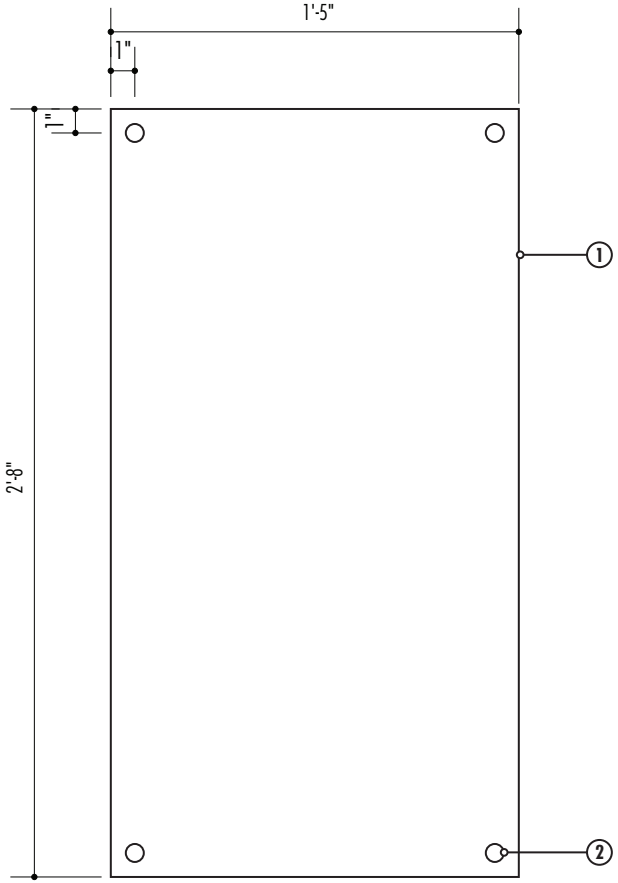

2 Front Elevation
Scale: 1 1/2"=1'-0"

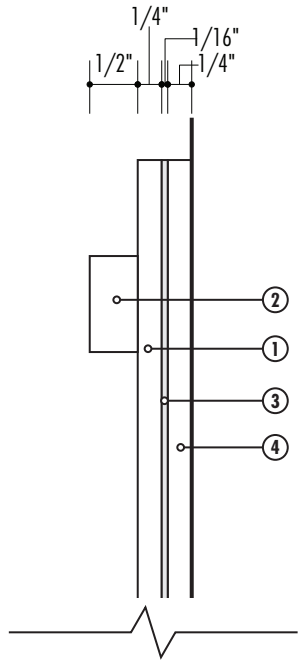

3 Side Elevation
Scale: Half Size

For the 8th Floor Build Out project, fabricator to replace lexan insert in existing structures.

1. 1/4" clear acrylic with flame polished edges. Entire assembly puck-mounted flush to wall.
2. 3/4" diameter mounting pucks in satin aluminum finish.
3. 1/16" clear lexan with first-surface screen printed text, symbols and 1/16" rule lines to match P-4 Black.
4. .040 thick Wrisco Clear Satin Anodized Aluminum (or approved equal) laminated to 1/8" pre-finished matte black P-95 acrylic. All edges to be sanded smooth.
5. Font: ITC Franklin Gothic Std Demi Condensed.
6. Font: ITC Franklin Gothic Std Book Condensed.

Designer to provide artwork for layout.

Fabricator to field verify each location prior to fabrication.

Babendure Design Group
8140 Walnut Hill Ln. #950
Dallas, Texas 75231
214.265.1960
www.babendure.com

University Medical Center of El Paso
El Paso Children's

8th Floor Build Out
Contract Drawings

Date	Issued
06.12.24	For Bid

Design Intent Drawings

©Babendure Design Group. All rights reserved. No part of this document may be reproduced or utilized in any form without prior written authorization from Babendure Design Group. This document serves as a device to communicate design intent only. Fabrication and installation of all products represented herein will be derived from the shop drawings produced by the project's contracted fabricator.

INT.101.3
Building Directory, Large

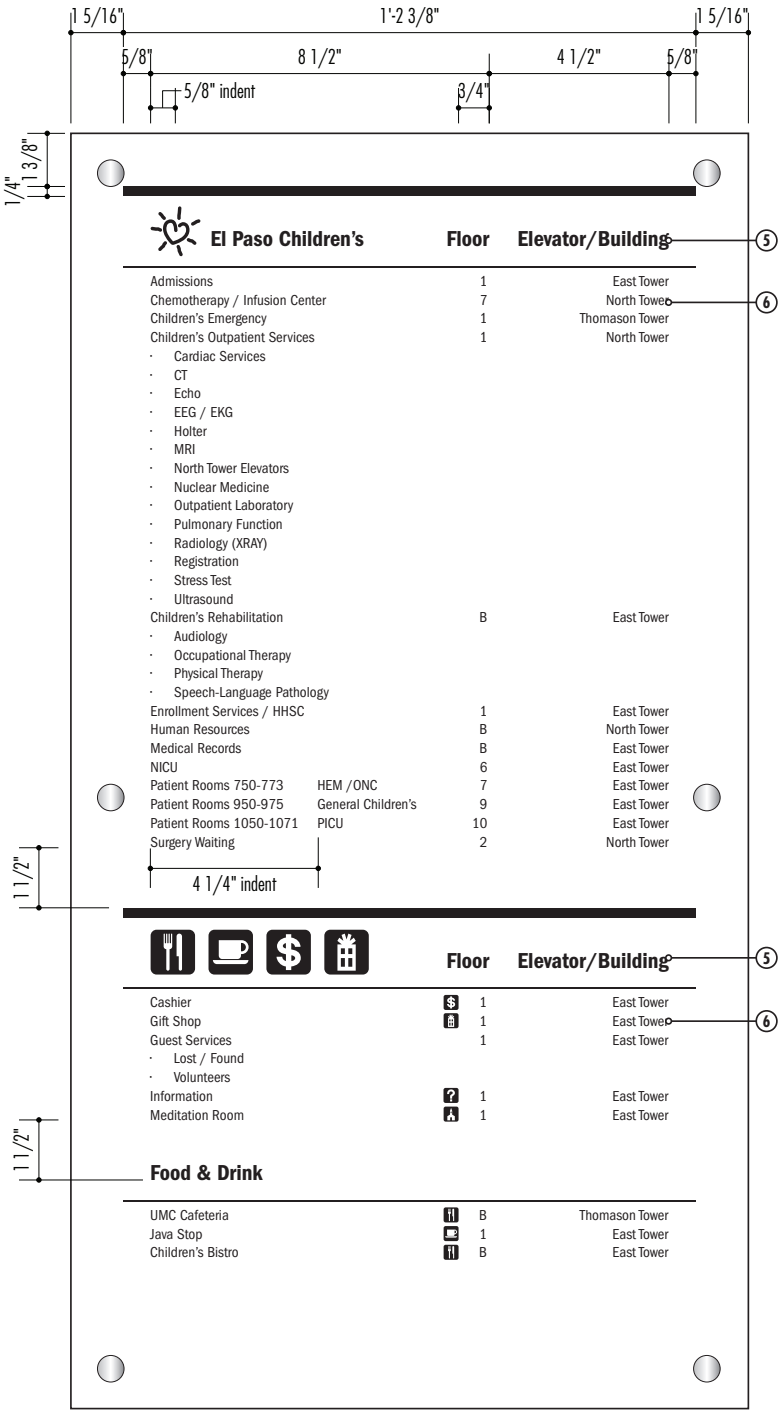

4 **Text Layout**

Scale: 3"=1'-0"

For the 8th Floor Build Out project, fabricator to replace lexan insert in existing structures.

1. 1/4" clear acrylic with flame polished edges. Entire assembly puck-mounted flush to wall.
2. 3/4" diameter mounting pucks in satin aluminum finish.
3. 1/16" clear lexan with first-surface screen printed text, symbols and 1/16" rule lines to match P-4 Black.
4. .040 thick Wrisco Clear Satin Anodized Aluminum (or approved equal) laminated to 1/8" pre-finished matte black P-95 acrylic. All edges to be sanded smooth.
5. Font: ITC Franklin Gothic Std Demi Condensed.
6. Font: ITC Franklin Gothic Std Book Condensed.

   Designer to provide artwork for layout.

   Fabricator to field verify each location prior to fabrication.

Babendure Design Group
8140 Walnut Hill Ln. #950
Dallas, Texas 75231
214.265.1960
www.babendure.com

University Medical Center of El Paso
El Paso Children's

8th Floor Build Out
Contract Drawings

Date	Issued
06.12.24	For Bid

Design Intent Drawings

©Babendure Design Group. All rights reserved. No part of this document may be reproduced or utilized in any form without prior written authorization from Babendure Design Group. This document serves as a device to communicate design intent only. Fabrication and installation of all products represented herein will be derived from the shop drawings produced by the project's contracted fabricator.

INT.101.3
Building Directory, Large

5 Text Layout - Detail
Scale: Half Size

For the 8th Floor Build Out project, fabricator to replace lexan insert in existing structures.

1. 1/4" clear acrylic with flame polished edges. Entire assembly puck-mounted flush to wall.
2. 3/4" diameter mounting pucks in satin aluminum finish.
3. 1/16" clear lexan with first-surface screen printed text, symbols and 1/16" rule lines to match P-4 Black.
4. .040 thick Wrisco Clear Satin Anodized Aluminum (or approved equal) laminated to 1/8" pre-finished matte black P-95 acrylic. All edges to be sanded smooth.
5. Font: ITC Franklin Gothic Std Demi Condensed.
6. Font: ITC Franklin Gothic Std Book Condensed.

Designer to provide artwork for layout.

Fabricator to field verify each location prior to fabrication.

Babendure Design Group
8140 Walnut Hill Ln. #950
Dallas, Texas 75231
214.265.1960
www.babendure.com

University Medical Center of El Paso
El Paso Children's

8th Floor Build Out
Contract Drawings

Date	Issued
06.12.24	For Bid

Design Intent Drawings

©Babendure Design Group. All rights reserved. No part of this document may be reproduced or utilized in any form without prior written authorization from Babendure Design Group. This document serves as a device to communicate design intent only. Fabrication and installation of all products represented herein will be derived from the shop drawings produced by the project's contracted fabricator.

INT.101.3
Building Directory, Large

1 INT.102.1 Elevator Directory, Small

Scale: 1 1/2"=1'-0"

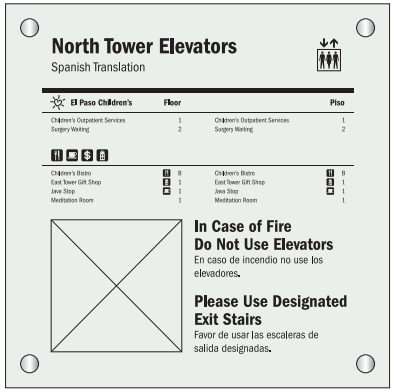

2 Alternate Text Layouts

Scale: 1 1/2"=1'-0"

3 Mounting Elevation

Scale: 3/8"=1'-0"

1. 1/4" clear acrylic with flame polished edges. Entire assembly puck-mounted flush to wall.
2. 3/4" diameter mounting pucks in satin aluminum finish.
3. 1/16" clear lexan with first-surface screen printed text, symbols and 1/16" rule lines to match P-4 Black.
4. 1/4" acrylic painted on all visible sides to match Benjamin Moore OC-62.
5. Font: ITC Franklin Gothic Std Demi Condensed.
6. Font: ITC Franklin Gothic Std Book Condensed.
7. Screen printed field on 1/16" lexan to match P-5 Red and 1/8" rule line to match P-3 White.
8. Evacuation map on 1/16" lexan to match P-4 Black and P-5 Red.

Designer to provide artwork for layout.

Fabricator to field verify each location prior to fabrication.

Babendure Design Group
8140 Walnut Hill Ln. #950
Dallas, Texas 75231
214.265.1960
www.babendure.com

University Medical Center of El Paso
El Paso Children's

8th Floor Build Out
Contract Drawings

Date	Issued
06.12.24	For Bid

Design Intent Drawings

©Babendure Design Group. All rights reserved. No part of this document may be reproduced or utilized in any form without prior written authorization from Babendure Design Group. This document serves as a device to communicate design intent only. Fabrication and installation of all products represented herein will be derived from the shop drawings produced by the project's contracted fabricator.

INT.102.1
Elevator Directory, Small

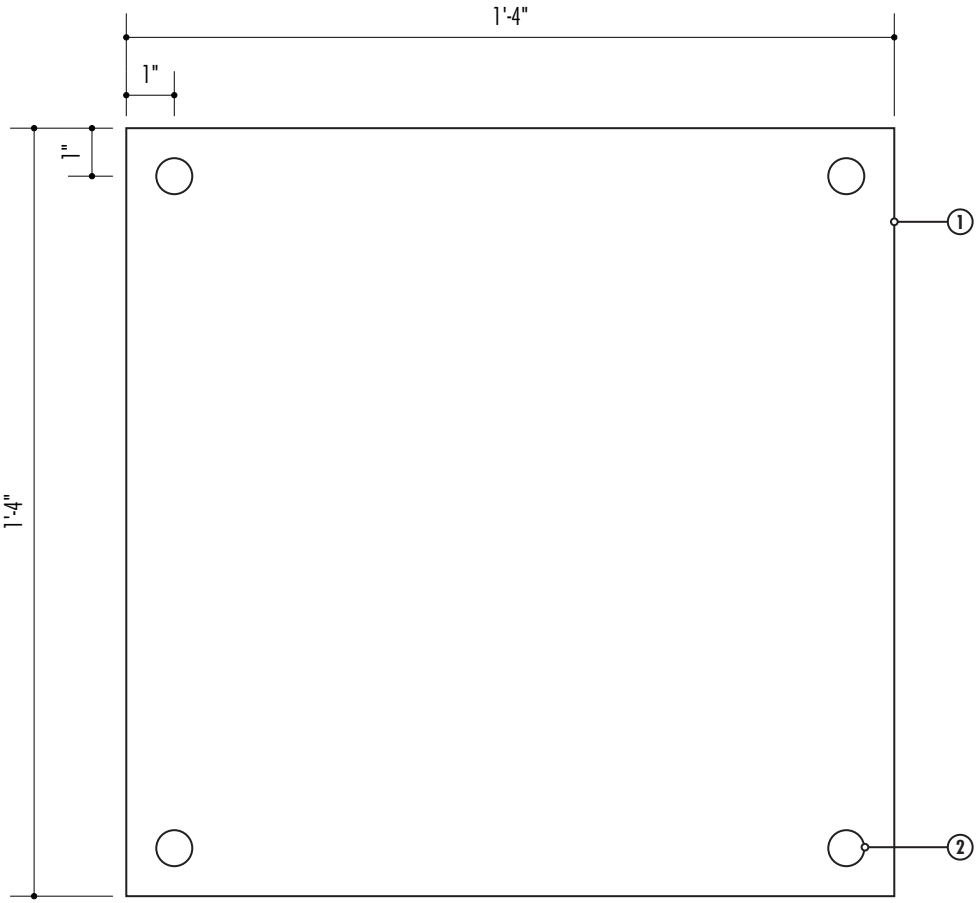

4 **Front Elevation**
Scale: 3"=1'-0"

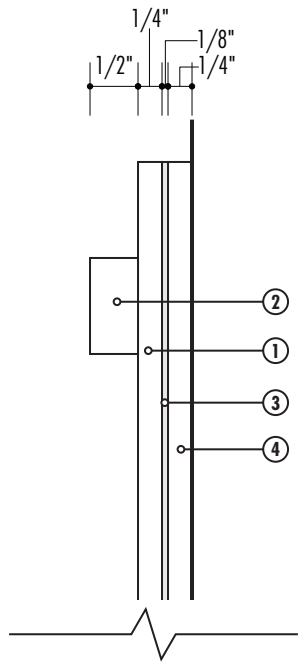

5 **Side Elevation**
Scale: Half Size

1. 1/4” clear acrylic with flame polished edges. Entire assembly puck-mounted flush to wall.
2. 3/4” diameter mounting pucks in satin aluminum finish.
3. 1/16” clear lexan with first-surface screen printed text, symbols and 1/16” rule lines to match P-4 Black.
4. 1/4” acrylic painted on all visible sides to match Benjamin Moore OC-62.
5. Font: ITC Franklin Gothic Std Demi Condensed.
6. Font: ITC Franklin Gothic Std Book Condensed.
7. Screen printed field on 1/16” lexan to match P-5 Red and 1/8” rule line to match P-3 White.
8. Evacuation map on 1/16” lexan to match P-4 Black and P-5 Red.

Designer to provide artwork for layout.

Fabricator to field verify each location prior to fabrication.

Babendure Design Group
8140 Walnut Hill Ln. #950
Dallas, Texas 75231
214.265.1960
www.babendure.com

University Medical Center of El Paso
El Paso Children’s

8th Floor Build Out
Contract Drawings

Date	Issued
06.12.24	For Bid

Design Intent Drawings

©Babendure Design Group. All rights reserved. No part of this document may be reproduced or utilized in any form without prior written authorization from Babendure Design Group. This document serves as a device to communicate design intent only. Fabrication and installation of all products represented herein will be derived from the shop drawings produced by the project’s contracted fabricator.

INT.102.1
Elevator Directory, Small

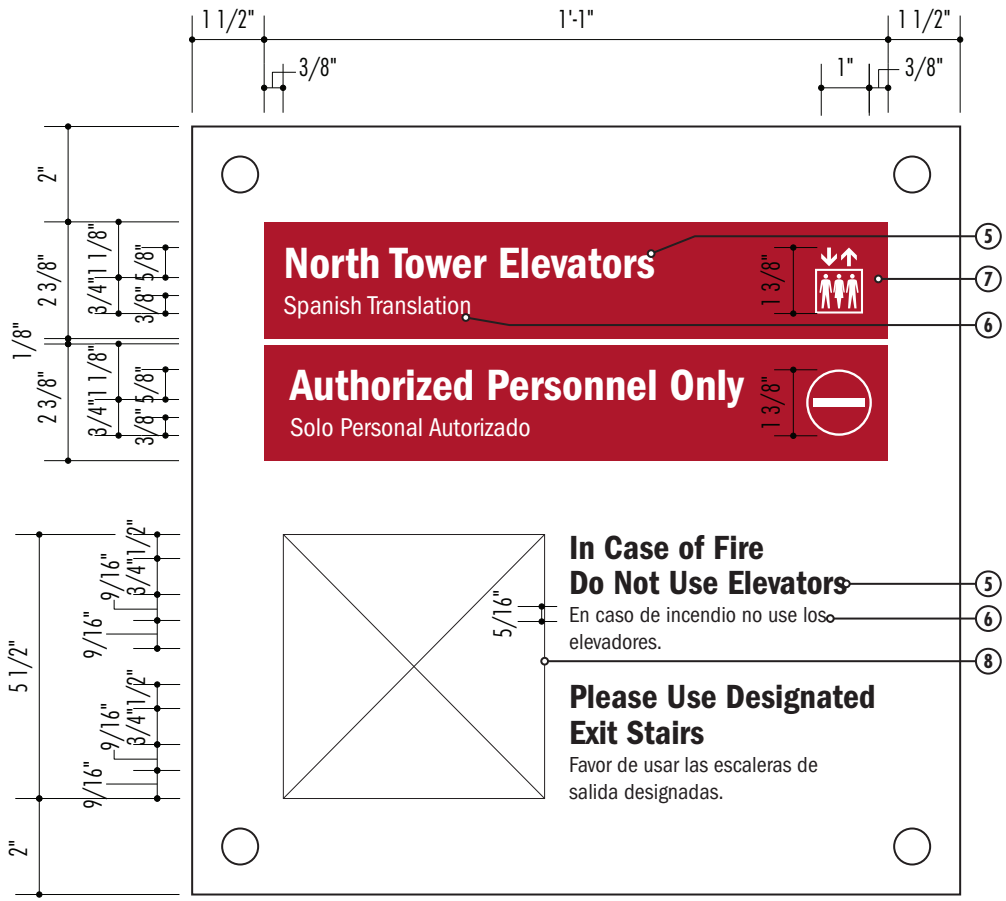

10 **STYLE 3 - Text Layout**

Scale: 3"=1'-0"

1. 1/4" clear acrylic with flame polished edges. Entire assembly puck-mounted flush to wall.
2. 3/4" diameter mounting pucks in satin aluminum finish.
3. 1/16" clear lexan with first-surface screen printed text, symbols and 1/16" rule lines to match P-4 Black.
4. 1/4" acrylic painted on all visible sides to match Benjamin Moore OC-62.
5. Font: ITC Franklin Gothic Std Demi Condensed.
6. Font: ITC Franklin Gothic Std Book Condensed.
7. Screen printed field on 1/16" lexan to match P-5 Red and 1/8" rule line to match P-3 White.
8. Evacuation map on 1/16" lexan to match P-4 Black and P-5 Red.

Designer to provide artwork for layout.

Fabricator to field verify each location prior to fabrication.

Babendure Design Group
8140 Walnut Hill Ln. #950
Dallas, Texas 75231
214.265.1960
www.babendure.com

University Medical Center of El Paso
El Paso Children's

8th Floor Build Out
Contract Drawings

Date	Issued
06.12.24	For Bid

Design Intent Drawings

©Babendure Design Group. All rights reserved. No part of this document may be reproduced or utilized in any form without prior written authorization from Babendure Design Group. This document serves as a device to communicate design intent only. Fabrication and installation of all products represented herein will be derived from the shop drawings produced by the project's contracted fabricator.

INT.102.1
Elevator Directory, Small

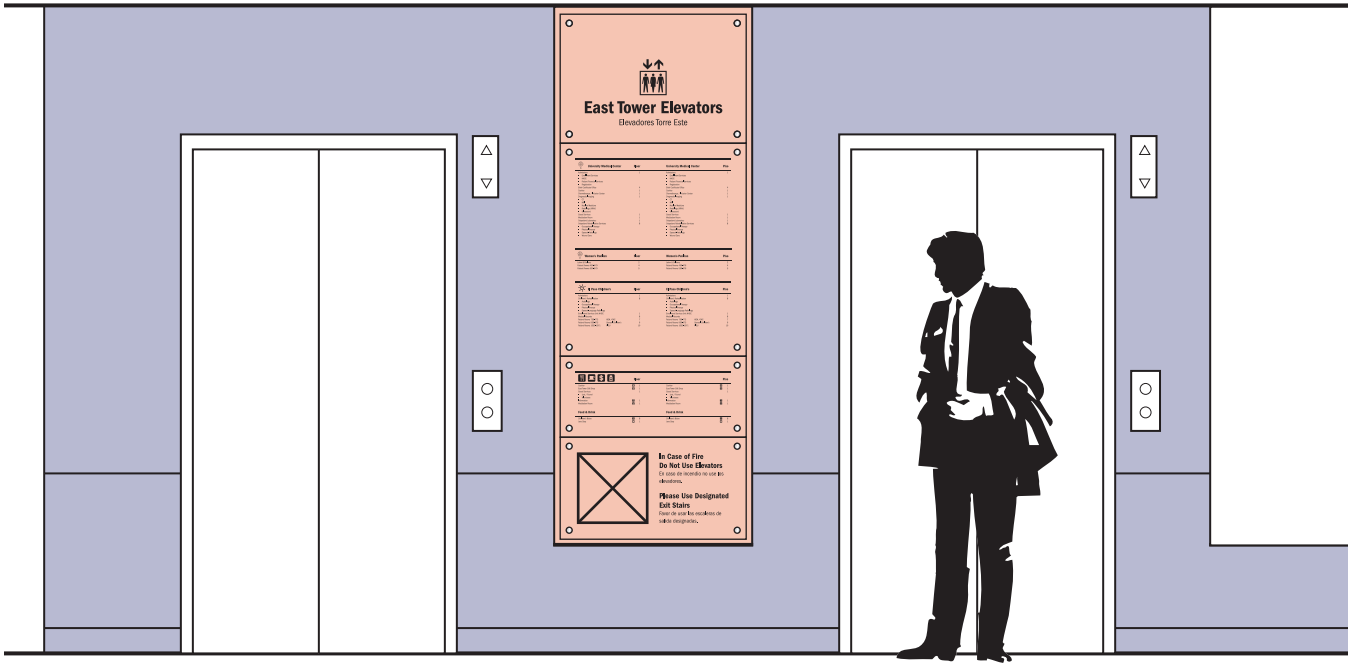

1 **INT.102.2 Elevator Directory, Medium**

Scale: 3/8"=1'-0"

1. Limits of architectural recess.
2. 1/4" clear acrylic with flame polished edges. Entire assembly puck-mounted flush to built-up backer.
3. 1" diameter mounting pucks in satin aluminum finish to hold 1/4" clear acrylic flush to backer assembly.
4. Fabricator to add 1/4" architectural backer of no less than Grade A-A into existing recess. See list below for paint colors.

Level B	Benjamin Moore 2170-50
Level 2, 4, 5	Benjamin Moore OC-62
Level 6	Benjamin Moore 2166-70
Level 7	Benjamin Moore 2066-60
Level 8	Matthews MP11477
Level 9	Benjamin Moore 2147-50
Level 10	Benjamin Moore 2153-60

5. 1/16" clear lexan with first-surface screen printed text, symbols and 1/16" rule lines to match P-4 Black.
6. Font: ITC Franklin Gothic Std Demi Condensed.
7. Font: ITC Franklin Gothic Std Book Condensed.
8. 1/16" clear lexan with first-surface screen printed evacuation map to match P-3 White and P-5 Red.

Designer to provide artwork for layout.

Fabricator to field verify each location prior to fabrication.

Babendure Design Group
8140 Walnut Hill Ln. #950
Dallas, Texas 75231
214.265.1960
www.babendure.com

University Medical Center of El Paso
El Paso Children's

8th Floor Build Out
Contract Drawings

Date	Issued
06.12.24	For Bid

Design Intent Drawings

©Babendure Design Group. All rights reserved. No part of this document may be reproduced or utilized in any form without prior written authorization from Babendure Design Group. This document serves as a device to communicate design intent only. Fabrication and installation of all products represented herein will be derived from the shop drawings produced by the project's contracted fabricator.

INT.102.2
Elevator Directory, Medium

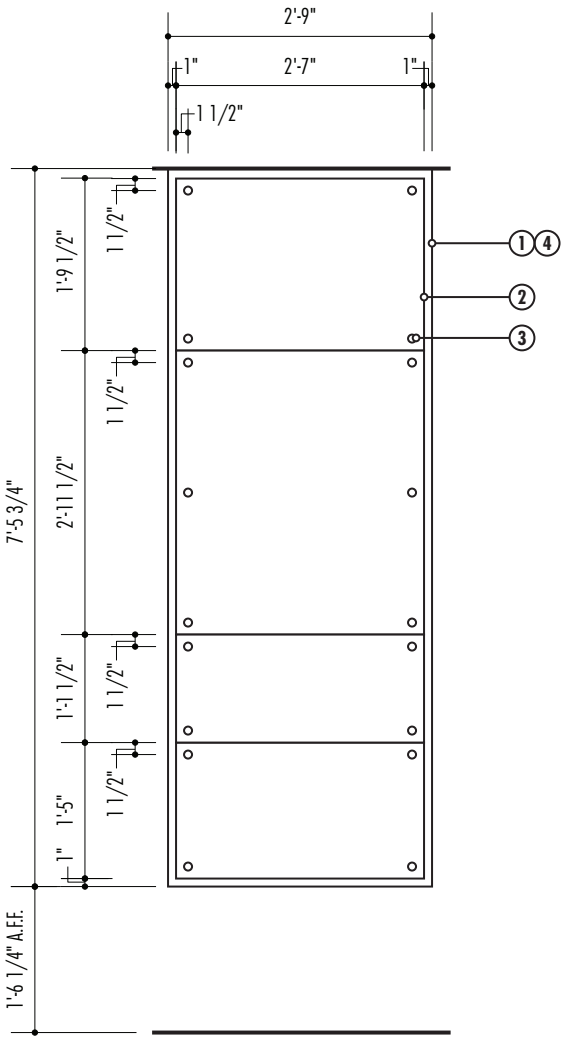

2 Front Elevation
Scale: 1/2"=1'-0"

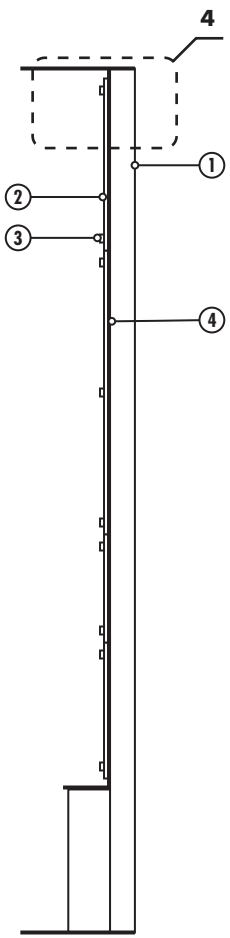

3 Side Section
Scale: 1/2"=1'-0"

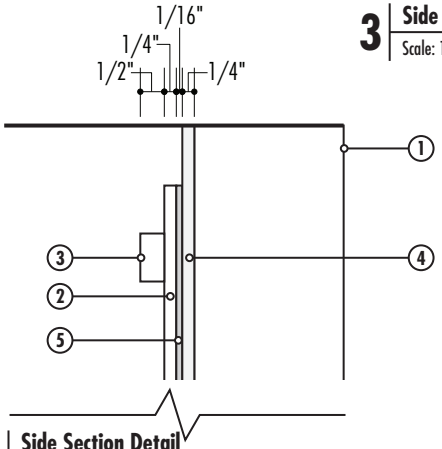

4 Side Section Detail
Scale: 3"=1'-0"

1. Limits of architectural recess.
2. 1/4" clear acrylic with flame polished edges. Entire assembly puck-mounted flush to built-up backer.
3. 1" diameter mounting pucks in satin aluminum finish to hold 1/4" clear acrylic flush to backer assembly.
4. Fabricator to add 1/4" architectural backer of no less than Grade A-A into existing recess. See list below for paint colors.

Level B	Benjamin Moore 2170-50
Level 2, 4, 5	Benjamin Moore OC-62
Level 6	Benjamin Moore 2166-70
Level 7	Benjamin Moore 2066-60
Level 8	Matthews MP11477
Level 9	Benjamin Moore 2147-50
Level 10	Benjamin Moore 2153-60

5. 1/16" clear lexan with first-surface screen printed text, symbols and 1/16" rule lines to match P-4 Black.
6. Font: ITC Franklin Gothic Std Demi Condensed.
7. Font: ITC Franklin Gothic Std Book Condensed.
8. 1/16" clear lexan with first-surface screen printed evacuation map to match P-3 White and P-5 Red.

Designer to provide artwork for layout.

Fabricator to field verify each location prior to fabrication.

Babendure Design Group
8140 Walnut Hill Ln. #950
Dallas, Texas 75231
214.265.1960
www.babendure.com

University Medical Center of El Paso
El Paso Children's

8th Floor Build Out
Contract Drawings

Date	Issued
06.12.24	For Bid

Design Intent Drawings

©Babendure Design Group. All rights reserved. No part of this document may be reproduced or utilized in any form without prior written authorization from Babendure Design Group. This document serves as a device to communicate design intent only. Fabrication and installation of all products represented herein will be derived from the shop drawings produced by the project's contracted fabricator.

INT.102.2
Elevator Directory, Medium

5 **Text Layout - Elevator Name**

Scale: 1 1/2"=1'-0"

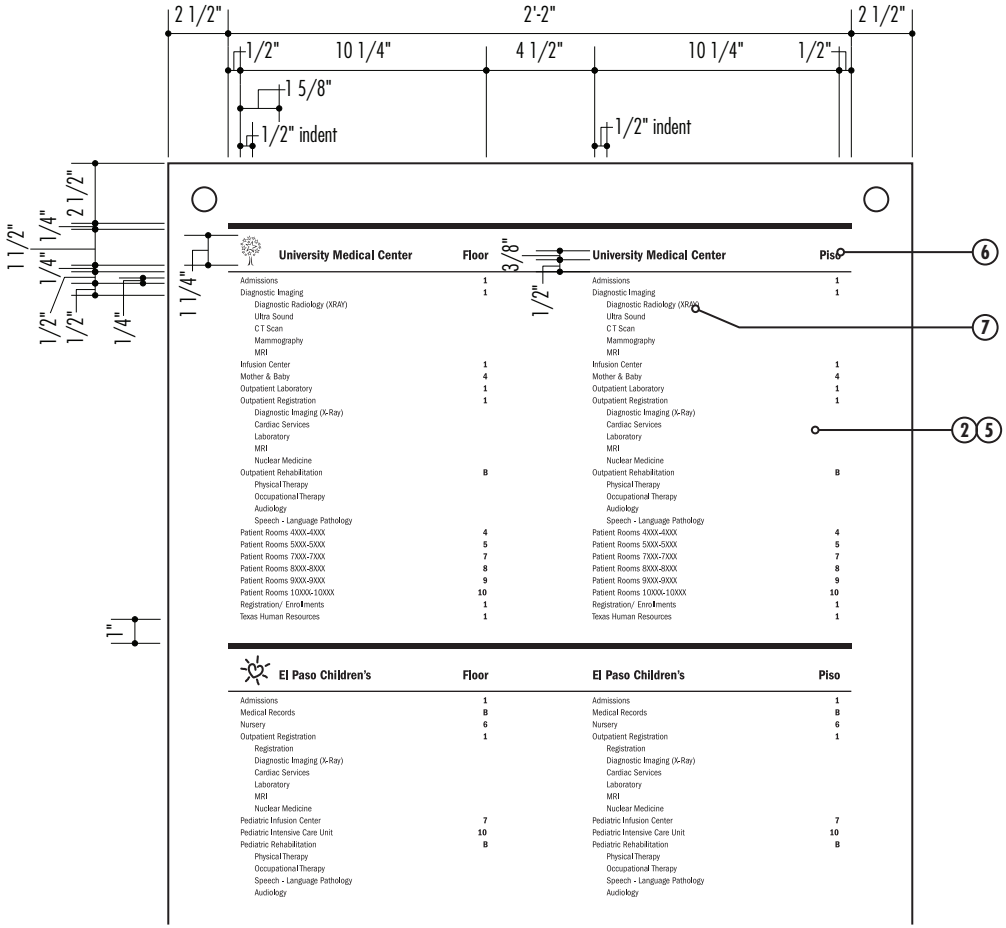

University Medical Center	Floor
Admissions	1
Diagnostic Imaging	1
Diagnostic Radiology (XRAY)	
Ultra Sound	
C T Scan	
Mammography	
MRI	
Infusion Center	1
Mother & Baby	4
Outpatient Laboratory	1
Outpatient Registration	1
Diagnostic Imaging (X-Ray)	
Cardiac Services	
Laboratory	
MRI	
Nuclear Medicine	
Outpatient Rehabilitation	B
Physical Therapy	
Occupational Therapy	
Audiology	
Speech - Language Pathology	
Patient Rooms 4XXX-4XXX	4
Patient Rooms 5XXX-5XXX	5
Patient Rooms 7XXX-7XXX	7
Patient Rooms 8XXX-8XXX	8
Patient Rooms 9XXX-9XXX	9
Patient Rooms 10XXX-10XXX	10
Registration/ Enrollments	1
Texas Human Resources	1

University Medical Center	Piso
Admissions	1
Diagnostic Imaging	1
Diagnostic Radiology (XRAY)	
Ultra Sound	
C T Scan	
Mammography	
MRI	
Infusion Center	1
Mother & Baby	4
Outpatient Laboratory	1
Outpatient Registration	1
Diagnostic Imaging (X-Ray)	
Cardiac Services	
Laboratory	
MRI	
Nuclear Medicine	
Outpatient Rehabilitation	B
Physical Therapy	
Occupational Therapy	
Audiology	
Speech - Language Pathology	
Patient Rooms 4XXX-4XXX	4
Patient Rooms 5XXX-5XXX	5
Patient Rooms 7XXX-7XXX	7
Patient Rooms 8XXX-8XXX	8
Patient Rooms 9XXX-9XXX	9
Patient Rooms 10XXX-10XXX	10
Registration/ Enrollments	1
Texas Human Resources	1

El Paso Children's	Floor
Admissions	1
Medical Records	B
Nursery	6
Outpatient Registration	1
Registration	
Diagnostic Imaging (X-Ray)	
Cardiac Services	
Laboratory	
MRI	
Nuclear Medicine	
Pediatric Infusion Center	7
Pediatric Intensive Care Unit	10
Pediatric Rehabilitation	B
Physical Therapy	
Occupational Therapy	
Speech - Language Pathology	
Audiology	

El Paso Children's	Piso
Admissions	1
Medical Records	B
Nursery	6
Outpatient Registration	1
Registration	
Diagnostic Imaging (X-Ray)	
Cardiac Services	
Laboratory	
MRI	
Nuclear Medicine	
Pediatric Infusion Center	7
Pediatric Intensive Care Unit	10
Pediatric Rehabilitation	B
Physical Therapy	
Occupational Therapy	
Speech - Language Pathology	
Audiology	

6 **Text Layout - Directory Listing**

Scale: 1 1/2"=1'-0"

1. Limits of architectural recess.
2. 1/4" clear acrylic with flame polished edges. Entire assembly puck-mounted flush to built-up backer.
3. 1" diameter mounting pucks in satin aluminum finish to hold 1/4" clear acrylic flush to backer assembly.
4. Fabricator to add 1/4" architectural backer of no less than Grade A-A into existing recess. See list below for paint colors.

Level B	Benjamin Moore 2170-50
Level 2, 4, 5	Benjamin Moore OC-62
Level 6	Benjamin Moore 2166-70
Level 7	Benjamin Moore 2066-60
Level 8	Matthews MP11477
Level 9	Benjamin Moore 2147-50
Level 10	Benjamin Moore 2153-60

5. 1/16" clear lexan with first-surface screen printed text, symbols and 1/16" rule lines to match P-4 Black.
6. Font: ITC Franklin Gothic Std Demi Condensed.
7. Font: ITC Franklin Gothic Std Book Condensed.
8. 1/16" clear lexan with first-surface screen printed evacuation map to match P-3 White and P-5 Red.

Designer to provide artwork for layout.

Fabricator to field verify each location prior to fabrication.

Babendure Design Group
8140 Walnut Hill Ln. #950
Dallas, Texas 75231
214.265.1960
www.babendure.com

University Medical Center of El Paso
El Paso Children's

8th Floor Build Out
Contract Drawings

Date	Issued
06.12.24	For Bid

Design Intent Drawings

©Babendure Design Group. All rights reserved. No part of this document may be reproduced or utilized in any form without prior written authorization from Babendure Design Group. This document serves as a device to communicate design intent only. Fabrication and installation of all products represented herein will be derived from the shop drawings produced by the project's contracted fabricator.

INT.102.2
Elevator Directory, Medium

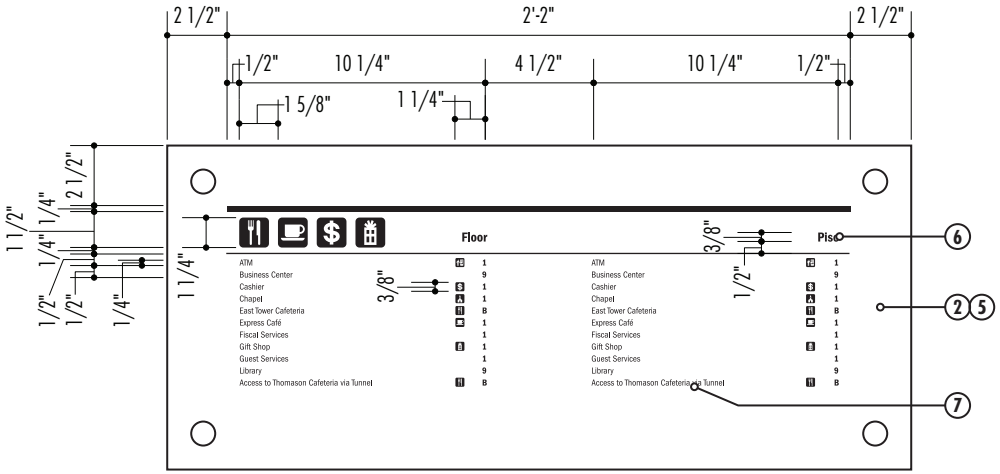

7 **Text Layout - Directory Listing**

Scale: 1 1/2"=1'-0"

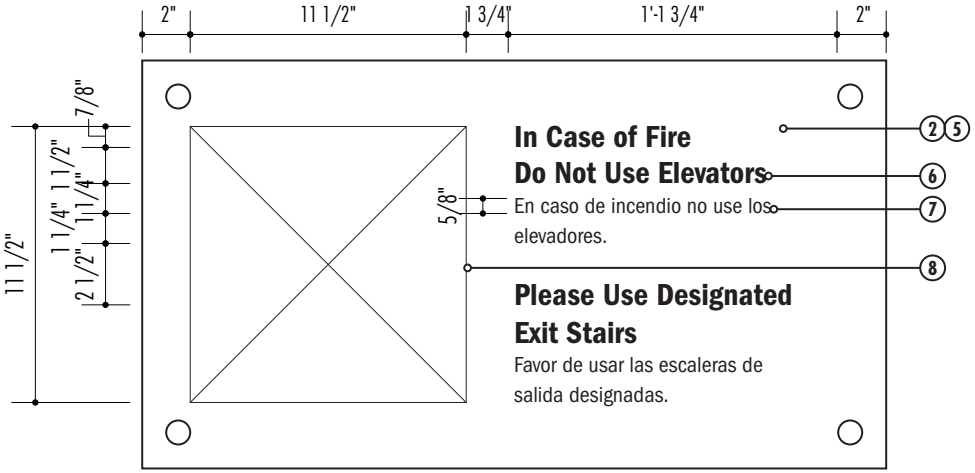

8 **Text Layout - Evacuation Information**

Scale: 1 1/2"=1'-0"

1. Limits of architectural recess.
2. 1/4" clear acrylic with flame polished edges. Entire assembly puck-mounted flush to built-up backer.
3. 1" diameter mounting pucks in satin aluminum finish to hold 1/4" clear acrylic flush to backer assembly.
4. Fabricator to add 1/4" architectural backer of no less than Grade A-A into existing recess. See list below for paint colors.

Level B	Benjamin Moore 2170-50
Level 2, 4, 5	Benjamin Moore OC-62
Level 6	Benjamin Moore 2166-70
Level 7	Benjamin Moore 2066-60
Level 8	Matthews MP11477
Level 9	Benjamin Moore 2147-50
Level 10	Benjamin Moore 2153-60

5. 1/16" clear lexan with first-surface screen printed text, symbols and 1/16" rule lines to match P-4 Black.
6. Font: ITC Franklin Gothic Std Demi Condensed.
7. Font: ITC Franklin Gothic Std Book Condensed.
8. 1/16" clear lexan with first-surface screen printed evacuation map to match P-3 White and P-5 Red.

Designer to provide artwork for layout.

Fabricator to field verify each location prior to fabrication.

Babendure Design Group
8140 Walnut Hill Ln. #950
Dallas, Texas 75231
214.265.1960
www.babendure.com

University Medical Center of El Paso
El Paso Children's

8th Floor Build Out
Contract Drawings

Date	Issued
06.12.24	For Bid

Design Intent Drawings

©Babendure Design Group. All rights reserved. No part of this document may be reproduced or utilized in any form without prior written authorization from Babendure Design Group. This document serves as a device to communicate design intent only. Fabrication and installation of all products represented herein will be derived from the shop drawings produced by the project's contracted fabricator.

INT.102.2
Elevator Directory, Medium

East Tower Level B

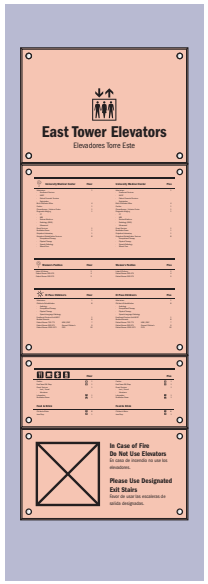

Lobby Walls: BM 2069-50
Sign Area: BM 2170-50

East Tower Level 2, 4, 5

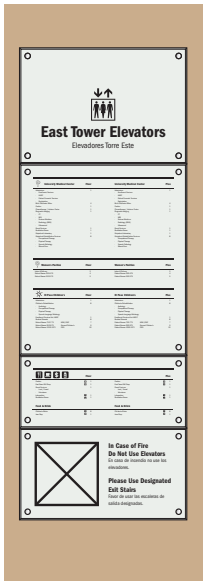

Lobby Walls: BM AC-8
Sign Area: BM OC-62

East Tower Level 6

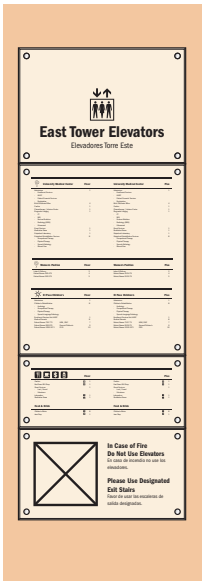

Lobby Walls: BM 2166-50
Sign Area: BM 2166-70

East Tower Level 7

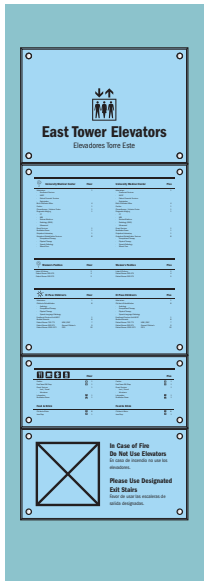

Lobby Walls: BM 2053-50
Sign Area: BM 2066-60

East Tower Level 9

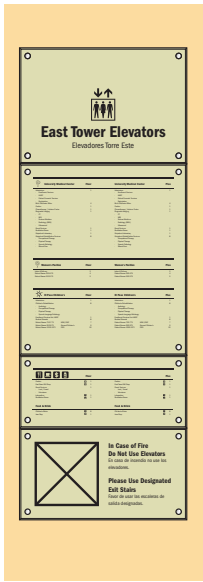

Lobby Walls: BM 2155-50
Sign Area: BM 2147-50

East Tower Level 10

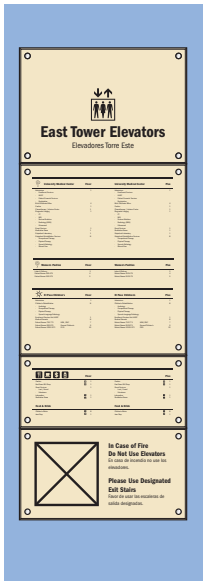

Lobby Walls: BM 2067-50
Sign Area: BM 2153-60

1. Limits of architectural recess.
2. 1/4” clear acrylic with flame polished edges. Entire assembly puck-mounted flush to built-up backer.
3. 1” diameter mounting pucks in satin aluminum finish to hold 1/4” clear acrylic flush to backer assembly.
4. Fabricator to add 1/4” architectural backer of no less than Grade A-A into existing recess. See list below for paint colors.

Level B	Benjamin Moore 2170-50
Level 2, 4, 5	Benjamin Moore OC-62
Level 6	Benjamin Moore 2166-70
Level 7	Benjamin Moore 2066-60
Level 8	Matthews MP11477
Level 9	Benjamin Moore 2147-50
Level 10	Benjamin Moore 2153-60

5. 1/16” clear lexan with first-surface screen printed text, symbols and 1/16” rule lines to match P-4 Black.
6. Font: ITC Franklin Gothic Std Demi Condensed.
7. Font: ITC Franklin Gothic Std Book Condensed.
8. 1/16” clear lexan with first-surface screen printed evacuation map to match P-3 White and P-5 Red.

Designer to provide artwork for layout.

Fabricator to field verify each location prior to fabrication.

Babendure Design Group
8140 Walnut Hill Ln. #950
Dallas, Texas 75231
214.265.1960
www.babendure.com

University Medical Center of El Paso
El Paso Children’s

8th Floor Build Out
Contract Drawings

Date	Issued
06.12.24	For Bid

Design Intent Drawings

©Babendure Design Group. All rights reserved. No part of this document may be reproduced or utilized in any form without prior written authorization from Babendure Design Group. This document serves as a device to communicate design intent only. Fabrication and installation of all products represented herein will be derived from the shop drawings produced by the project’s contracted fabricator.

INT.102.2
Elevator Directory, Medium

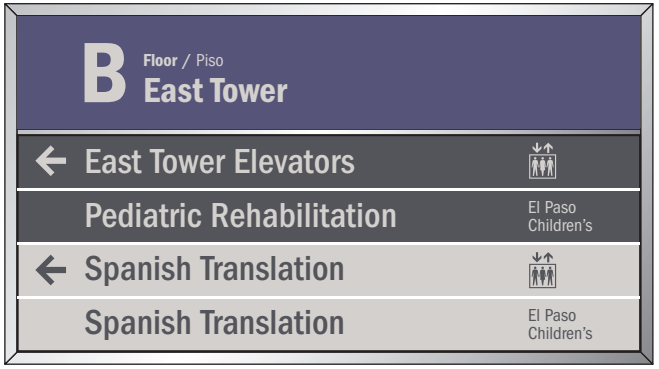

1 **INT.103.1 - Wall Directional, Extra-Small**

Scale: 1 1/2"=1'-0"

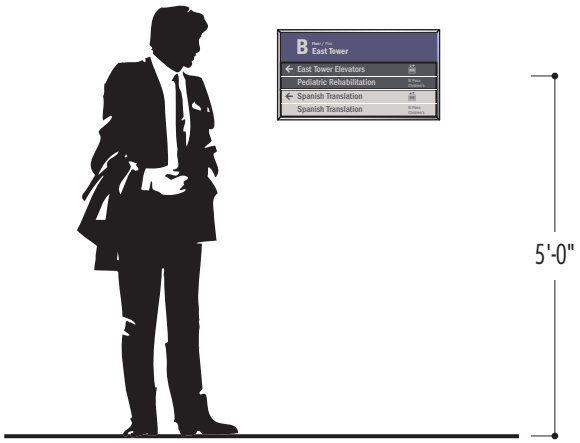

2 **Mounting Elevation**

Scale: 3/8"=1'-0"

1. "Premier Plus" aluminum extrusion frame part number "2040 Boxed" with 5/16" inside depth and satin silver finish as provided by The JRS Company. (Or approved equal.)

   Complete assembly to be mounted with low-VOC thin-mil VHB Tape and low-VOC silicone adhesive. Sign to be located at 5'-0" to center A.F.F.

   The JRS Company
   www.jrscoinc.com

2. Message panel to be 1/8" acrylic insert mounted into aluminum frame with JRS Sign Snap system.

3. Surface mounted digital print on opaque white substrate with Lustre overlaminate: Orajet 3951 digital print media substrate, 2 mil cast film with Oroguard 210 over-laminate, semi-gloss - CMYK color pallet

4. 1/4" "Premier Plus" divider with satin silver finish, permanently mounted in frame.

5. Sign Snap mounting system part number "BO9500" as provided by The JRS Company. (Or approved equal.)

6. Masonite backer.

7. Message field of digital print to match I-13 Pale Purple and text to match I-11 Light Gray.

8. Font: ITC Franklin Gothic Std Demi Condensed.

9. Font: ITC Franklin Gothic Std Book Condensed.

10. Message field of digital print to match I-12 Dark Gray with decorative rule lines to match I-3 White and text and symbols to match I-11 Light Gray. Font: ITC Franklin Gothic Std Medium Condensed.

11. Message field of digital print to match I-11 Light Gray with decorative rule lines to match I-3 White and text and symbols to match I-2 Dark Gray. Font: ITC Franklin Gothic Std Medium Condensed.

12. Message field of digital print to match I-5 Red with decorative rule lines to match I-3 White and text to match I-11 Light Gray. Font: ITC Franklin Gothic Std Medium Condensed.

Babendure Design Group
8140 Walnut Hill Ln. #950
Dallas, Texas 75231
214.265.1960
www.babendure.com

University Medical Center of El Paso
El Paso Children's

8th Floor Build Out
Contract Drawings

Date	Issued
06.12.24	For Bid

Design Intent Drawings

©Babendure Design Group. All rights reserved. No part of this document may be reproduced or utilized in any form without prior written authorization from Babendure Design Group. This document serves as a device to communicate design intent only. Fabrication and installation of all products represented herein will be derived from the shop drawings produced by the project's contracted fabricator.

INT.103.1
Wall Directional, Extra-Small

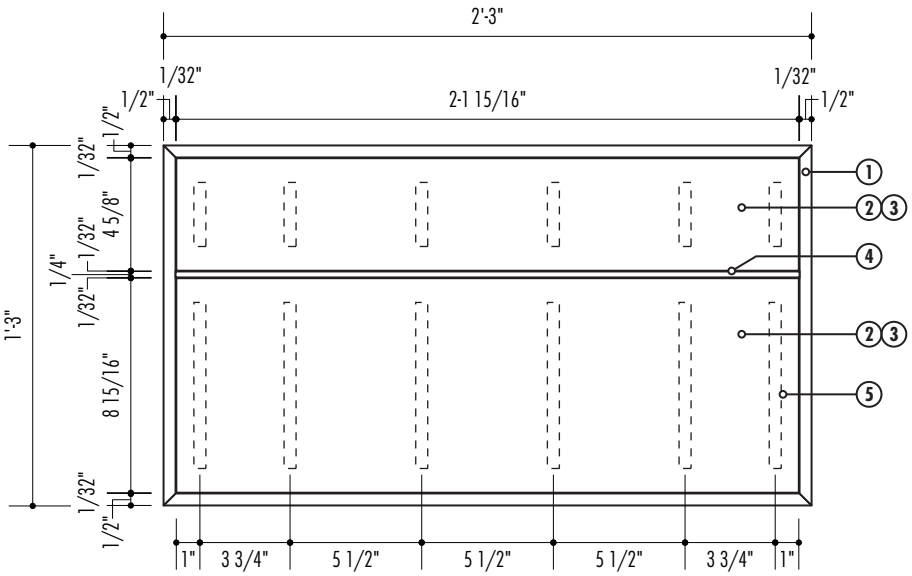

3 **Front Elevation**

Scale: 1 1/2"=1'-0"

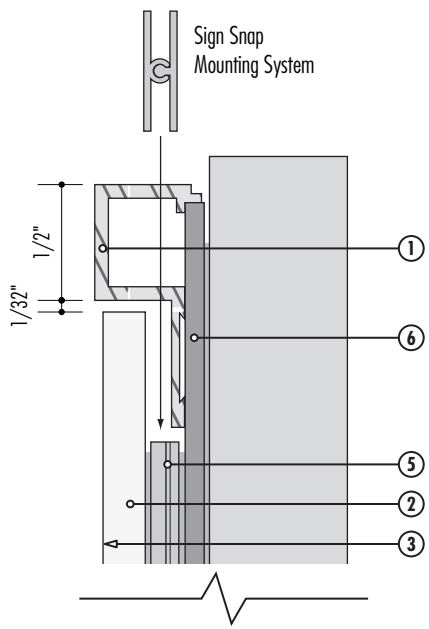

4 **Detail - Frame Section**

Scale: Full Size

1. "Premier Plus" aluminum extrusion frame part number "2040 Boxed" with 5/16" inside depth and satin silver finish as provided by The JRS Company. (Or approved equal.)

   Complete assembly to be mounted with low-VOC thin-mil VHB Tape and low-VOC silicone adhesive. Sign to be located at 5'-0" to center A.F.F.

   The JRS Company
   www.jrscoinc.com

2. Message panel to be 1/8" acrylic insert mounted into aluminum frame with JRS Sign Snap system.

3. Surface mounted digital print on opaque white substrate with Lustre overlaminate: Orajet 3951 digital print media substrate, 2 mil cast film with Oroguard 210 over-laminate, semi-gloss - CMYK color pallet

4. 1/4" "Premier Plus" divider with satin silver finish, permanently mounted in frame.

5. Sign Snap mounting system part number "BO9500" as provided by The JRS Company. (Or approved equal.)

6. Masonite backer.

7. Message field of digital print to match I-13 Pale Purple and text to match I-11 Light Gray.

8. Font: ITC Franklin Gothic Std Demi Condensed.

9. Font: ITC Franklin Gothic Std Book Condensed.

10. Message field of digital print to match I-12 Dark Gray with decorative rule lines to match I-3 White and text and symbols to match I-11 Light Gray. Font: ITC Franklin Gothic Std Medium Condensed.

11. Message field of digital print to match I-11 Light Gray with decorative rule lines to match I-3 White and text and symbols to match I-2 Dark Gray. Font: ITC Franklin Gothic Std Medium Condensed.

12. Message field of digital print to match I-5 Red with decorative rule lines to match I-3 White and text to match I-11 Light Gray. Font: ITC Franklin Gothic Std Medium Condensed.

Babendure Design Group
8140 Walnut Hill Ln. #950
Dallas, Texas 75231
214.265.1960
www.babendure.com

University Medical Center of El Paso
El Paso Children's

8th Floor Build Out
Contract Drawings

Date	Issued
06.12.24	For Bid

Design Intent Drawings

©Babendure Design Group. All rights reserved. No part of this document may be reproduced or utilized in any form without prior written authorization from Babendure Design Group. This document serves as a device to communicate design intent only. Fabrication and installation of all products represented herein will be derived from the shop drawings produced by the project's contracted fabricator.

INT.103.1
Wall Directional, Extra-Small

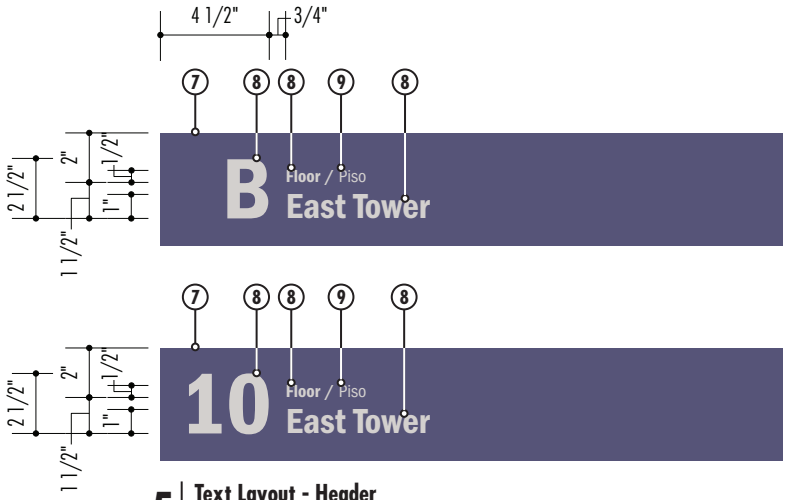

5 Text Layout - Header
Scale: 1 1/2"=1'-0"

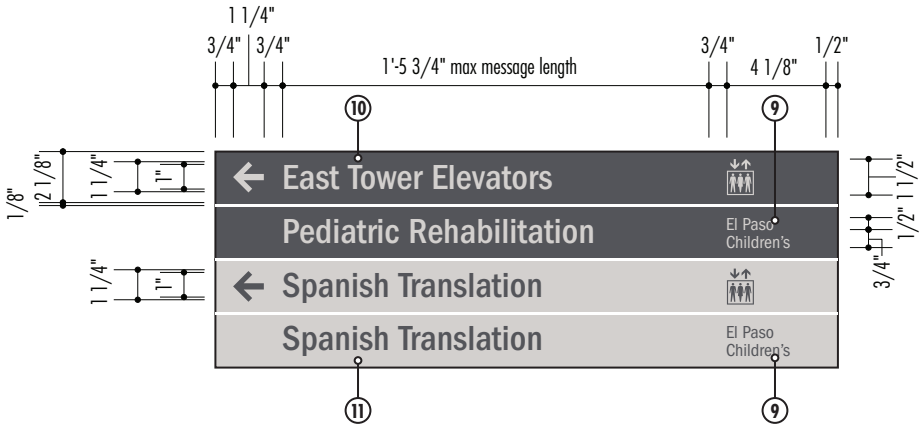

6 Text Layout
Scale: 1 1/2"=1'-0"

1. "Premier Plus" aluminum extrusion frame part number "2040 Boxed" with 5/16" inside depth and satin silver finish as provided by The JRS Company. (Or approved equal.)

   Complete assembly to be mounted with low-VOC thin-mil VHB Tape and low-VOC silicone adhesive. Sign to be located at 5'-0" to center A.F.F.

   The JRS Company
   www.jrscoinc.com

2. Message panel to be 1/8" acrylic insert mounted into aluminum frame with JRS Sign Snap system.

3. Surface mounted digital print on opaque white substrate with Lustre overlaminate: Orajet 3951 digital print media substrate, 2 mil cast film with Oroguard 210 over-laminate, semi-gloss - CMYK color pallet

4. 1/4" "Premier Plus" divider with satin silver finish, permanently mounted in frame.

5. Sign Snap mounting system part number "BO9500" as provided by The JRS Company. (Or approved equal.)

6. Masonite backer.

7. Message field of digital print to match I-13 Pale Purple and text to match I-11 Light Gray.

8. Font: ITC Franklin Gothic Std Demi Condensed.

9. Font: ITC Franklin Gothic Std Book Condensed.

10. Message field of digital print to match I-12 Dark Gray with decorative rule lines to match I-3 White and text and symbols to match I-11 Light Gray. Font: ITC Franklin Gothic Std Medium Condensed.

11. Message field of digital print to match I-11 Light Gray with decorative rule lines to match I-3 White and text and symbols to match I-2 Dark Gray. Font: ITC Franklin Gothic Std Medium Condensed.

12. Message field of digital print to match I-5 Red with decorative rule lines to match I-3 White and text to match I-11 Light Gray. Font: ITC Franklin Gothic Std Medium Condensed.

Babendure Design Group
8140 Walnut Hill Ln. #950
Dallas, Texas 75231
214.265.1960
www.babendure.com

University Medical Center of El Paso
El Paso Children's

8th Floor Build Out
Contract Drawings

Date	Issued
06.12.24	For Bid

Design Intent Drawings

©Babendure Design Group. All rights reserved. No part of this document may be reproduced or utilized in any form without prior written authorization from Babendure Design Group. This document serves as a device to communicate design intent only. Fabrication and installation of all products represented herein will be derived from the shop drawings produced by the project's contracted fabricator.

INT.103.1
Wall Directional, Extra-Small

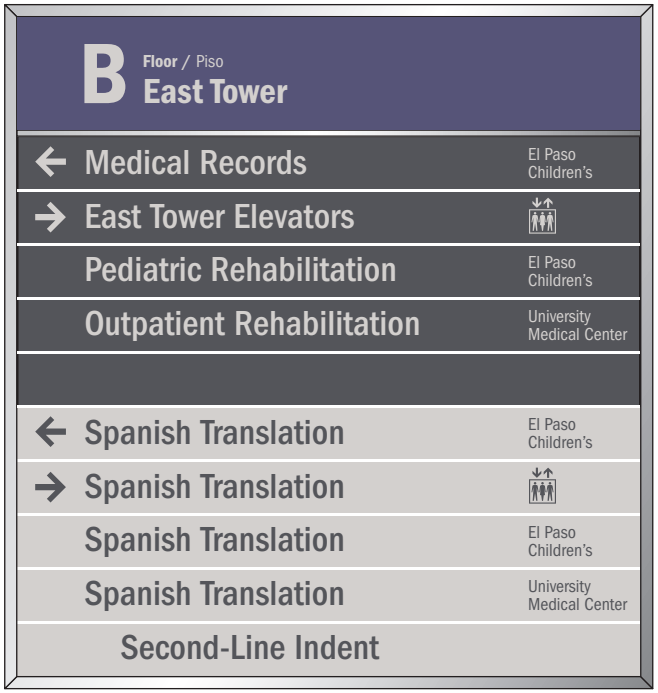

1 **INT.103.2 - Wall Directional, Small**

Scale: 1 1/2"=1'-0"

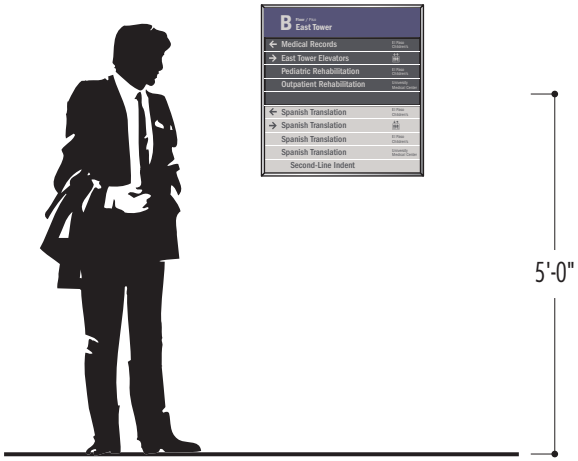

2 **Mounting Elevation**

Scale: 3/8"=1'-0"

1. "Premier Plus" aluminum extrusion frame part number "2040 Boxed" with 5/16" inside depth and satin silver finish as provided by The JRS Company. (Or approved equal.)

   Complete assembly to be mounted with low-VOC thin-mil VHB Tape and low-VOC silicone adhesive. Sign to be located at 5'-0" to center A.F.F.

   The JRS Company
   www.jrscoinc.com

2. Message panel to be 1/8" acrylic insert mounted into aluminum frame with JRS Sign Snap system.

3. Surface mounted digital print on opaque white substrate with Lustre overlaminate: Orajet 3951 digital print media substrate, 2 mil cast film with Oroguard 210 over-laminate, semi-gloss - CMYK color pallet

4. 1/4" "Premier Plus" divider with satin silver finish, permanently mounted in frame.

5. Sign Snap mounting system part number "BO9500" as provided by The JRS Company. (Or approved equal.)

6. Masonite backer.

7. Message field of digital print to match I-13 Pale Purple and text to match I-11 Light Gray.

8. Font: ITC Franklin Gothic Std Demi Condensed.

9. Font: ITC Franklin Gothic Std Book Condensed.

10. Message field of digital print to match I-12 Dark Gray with decorative rule lines to match I-3 White and text and symbols to match I-11 Light Gray. Font: ITC Franklin Gothic Std Medium Condensed.

11. Message field of digital print to match I-11 Light Gray with decorative rule lines to match I-3 White and text and symbols to match I-2 Dark Gray. Font: ITC Franklin Gothic Std Medium Condensed.

12. Message field of digital print to match I-5 Red with decorative rule lines to match I-3 White and text to match I-11 Light Gray. Font: ITC Franklin Gothic Std Medium Condensed.

Babendure Design Group
8140 Walnut Hill Ln. #950
Dallas, Texas 75231
214.265.1960
www.babendure.com

University Medical Center of El Paso
El Paso Children's

8th Floor Build Out
Contract Drawings

Date	Issued
06.12.24	For Bid

Design Intent Drawings

©Babendure Design Group. All rights reserved. No part of this document may be reproduced or utilized in any form without prior written authorization from Babendure Design Group. This document serves as a device to communicate design intent only. Fabrication and installation of all products represented herein will be derived from the shop drawings produced by the project's contracted fabricator.

INT.103.2
Wall Directional, Small

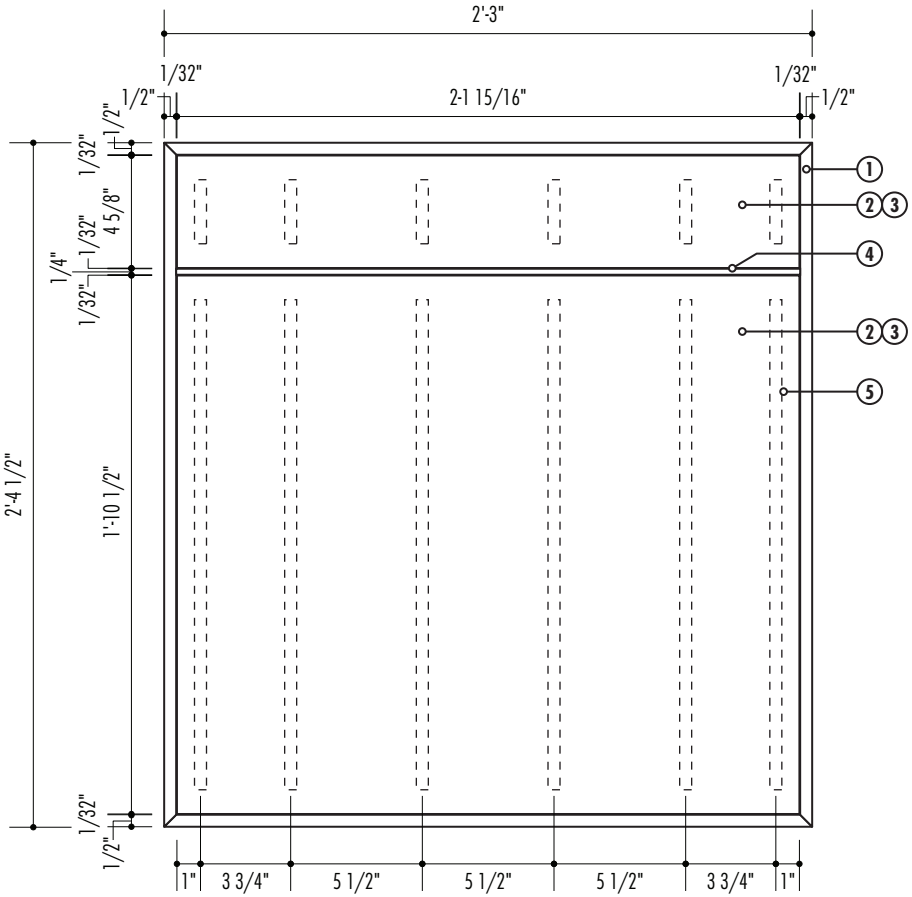

3 **Front Elevation**
Scale: 1 1/2"=1'-0"

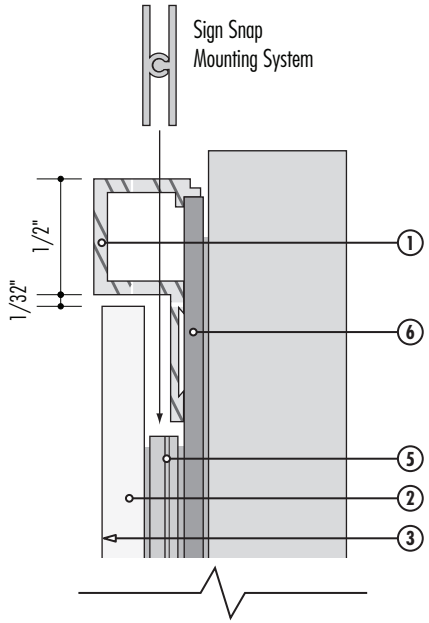

4 **Detail - Frame Section**
Scale: Full Size

1. "Premier Plus" aluminum extrusion frame part number "2040 Boxed" with 5/16" inside depth and satin silver finish as provided by The JRS Company. (Or approved equal.)

   Complete assembly to be mounted with low-VOC thin-mil VHB Tape and low-VOC silicone adhesive. Sign to be located at 5'-0" to center A.F.F.

   The JRS Company
   www.jrscoinc.com

2. Message panel to be 1/8" acrylic insert mounted into aluminum frame with JRS Sign Snap system.

3. Surface mounted digital print on opaque white substrate with Lustre overlaminate: Orajet 3951 digital print media substrate, 2 mil cast film with Oroguard 210 over-laminate, semi-gloss - CMYK color pallet

4. 1/4" "Premier Plus" divider with satin silver finish, permanently mounted in frame.

5. Sign Snap mounting system part number "BO9500" as provided by The JRS Company. (Or approved equal.)

6. Masonite backer.

7. Message field of digital print to match I-13 Pale Purple and text to match I-11 Light Gray.

8. Font: ITC Franklin Gothic Std Demi Condensed.

9. Font: ITC Franklin Gothic Std Book Condensed.

10. Message field of digital print to match I-12 Dark Gray with decorative rule lines to match I-3 White and text and symbols to match I-11 Light Gray. Font: ITC Franklin Gothic Std Medium Condensed.

11. Message field of digital print to match I-11 Light Gray with decorative rule lines to match I-3 White and text and symbols to match I-2 Dark Gray. Font: ITC Franklin Gothic Std Medium Condensed.

12. Message field of digital print to match I-5 Red with decorative rule lines to match I-3 White and text to match I-11 Light Gray. Font: ITC Franklin Gothic Std Medium Condensed.

Babendure Design Group
8140 Walnut Hill Ln. #950
Dallas, Texas 75231
214.265.1960
www.babendure.com

University Medical Center of El Paso
El Paso Children's

8th Floor Build Out
Contract Drawings

Date	Issued
06.12.24	For Bid

Design Intent Drawings

©Babendure Design Group. All rights reserved. No part of this document may be reproduced or utilized in any form without prior written authorization from Babendure Design Group. This document serves as a device to communicate design intent only. Fabrication and installation of all products represented herein will be derived from the shop drawings produced by the project's contracted fabricator.

INT.103.2
Wall Directional, Small

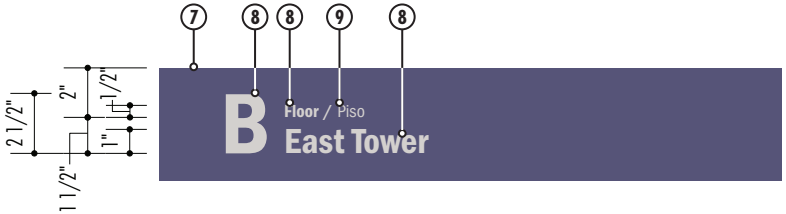

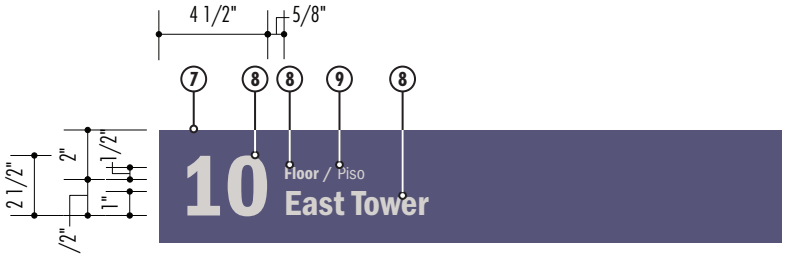

5 **Text Layout - Header**

Scale: 1 1/2"=1'-0"

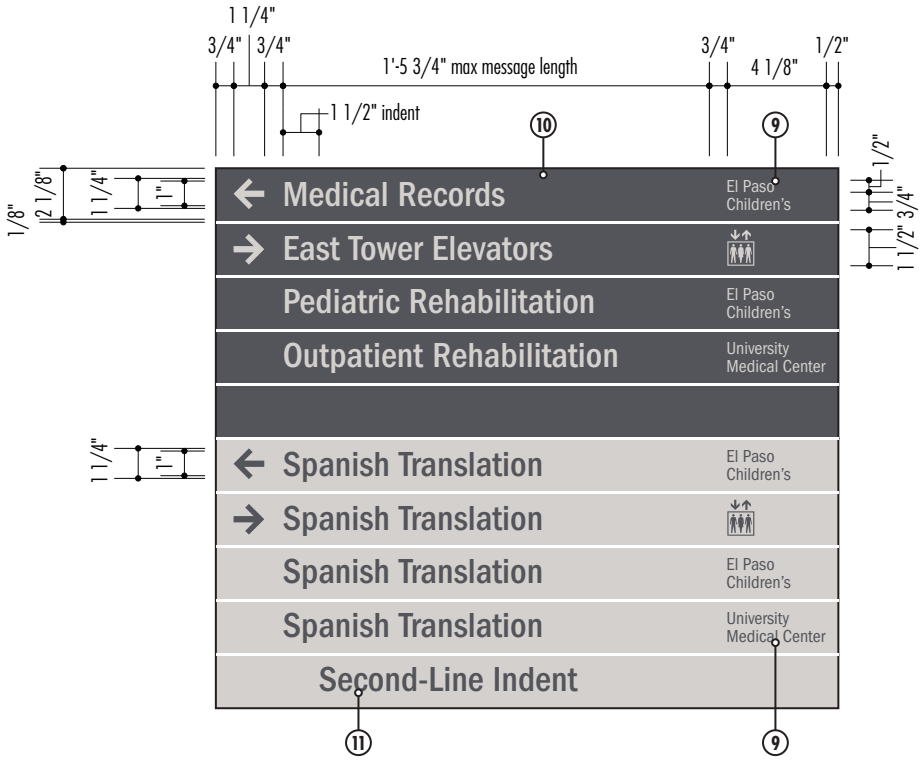

6 **Text Layout**

Scale: 1 1/2"=1'-0"

1. "Premier Plus" aluminum extrusion frame part number "2040 Boxed" with 5/16" inside depth and satin silver finish as provided by The JRS Company. (Or approved equal.)

   Complete assembly to be mounted with low-VOC thin-mil VHB Tape and low-VOC silicone adhesive. Sign to be located at 5'-0" to center A.F.F.

   The JRS Company
   www.jrscoinc.com

2. Message panel to be 1/8" acrylic insert mounted into aluminum frame with JRS Sign Snap system.

3. Surface mounted digital print on opaque white substrate with Lustre overlaminate: Orajet 3951 digital print media substrate, 2 mil cast film with Oroguard 210 over-laminate, semi-gloss - CMYK color pallet

4. 1/4" "Premier Plus" divider with satin silver finish, permanently mounted in frame.

5. Sign Snap mounting system part number "BO9500" as provided by The JRS Company. (Or approved equal.)

6. Masonite backer.

7. Message field of digital print to match I-13 Pale Purple and text to match I-11 Light Gray.

8. Font: ITC Franklin Gothic Std Demi Condensed.

9. Font: ITC Franklin Gothic Std Book Condensed.

10. Message field of digital print to match I-12 Dark Gray with decorative rule lines to match I-3 White and text and symbols to match I-11 Light Gray. Font: ITC Franklin Gothic Std Medium Condensed.

11. Message field of digital print to match I-11 Light Gray with decorative rule lines to match I-3 White and text and symbols to match I-2 Dark Gray. Font: ITC Franklin Gothic Std Medium Condensed.

12. Message field of digital print to match I-5 Red with decorative rule lines to match I-3 White and text to match I-11 Light Gray. Font: ITC Franklin Gothic Std Medium Condensed.

Babendure Design Group
8140 Walnut Hill Ln. #950
Dallas, Texas 75231
214.265.1960
www.babendure.com

University Medical Center of El Paso
El Paso Children's

8th Floor Build Out
Contract Drawings

Date	Issued
06.12.24	For Bid

Design Intent Drawings

©Babendure Design Group. All rights reserved. No part of this document may be reproduced or utilized in any form without prior written authorization from Babendure Design Group. This document serves as a device to communicate design intent only. Fabrication and installation of all products represented herein will be derived from the shop drawings produced by the project's contracted fabricator.

INT.103.2
Wall Directional, Small

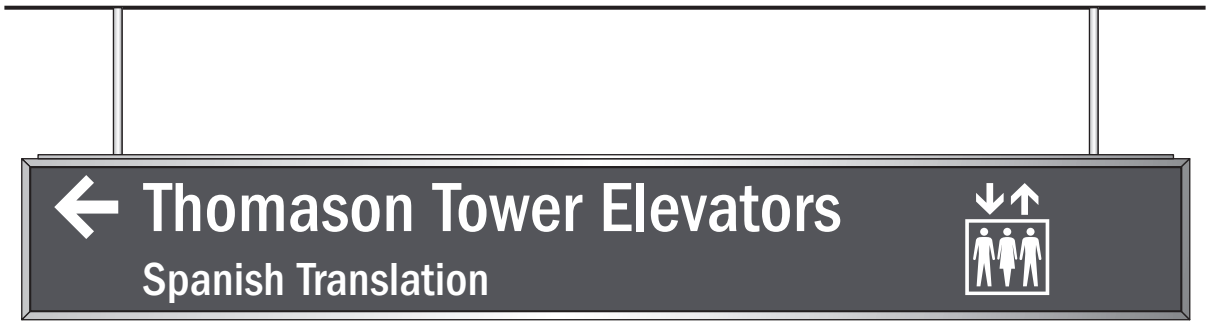

1 **INT.104.1 - Overhead Directional, 1-Line Suspended**

Scale: 1"=1'-0"

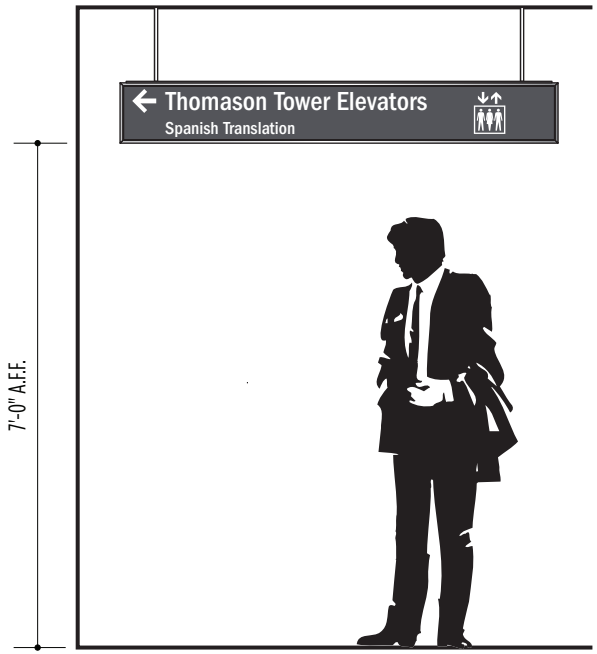

2 **Mounting Elevation**

Scale: 3/8"=1'-0"

1. 1/4" diameter schedule 40 pipe (.54" O.D.) painted to match P-33 Frame Silver, threaded on one end.

   Sign to be located at 7'- 0" to the bottom A.F.F.

2. 1/4" aluminum top plate painted to match P-33 Frame Silver with routed center section to conceal weld.

3. 1" x 1/2" aluminum frame painted to match P-33 Frame Silver.

4. 1/4" aluminum corner gusset.

5. 1/16" acrylic message panel painted to match P-12 Dark Gray. Provide necessary internal supports to keep panel from buckling or warping.

6. 1/4" acrylic build-up to hold message panel flush to frame.

7. Aluminum mounting angle above ceiling.

8. Applied vinyl text and symbols to match V-2 White. Font: ITC Franklin Gothic Std Medium Condensed.

9. Applied vinyl support text to match V-2 White. Font: ITC Franklin Gothic Std Book Condensed.

10. For EMERGENCY messages, background field painted to match P-5 Red.

    Fabricator to field verify ceiling conditions prior to fabrication.

Babendure Design Group
8140 Walnut Hill Ln. #950
Dallas, Texas 75231
214.265.1960
www.babendure.com

University Medical Center of El Paso
El Paso Children's

8th Floor Build Out
Contract Drawings

Date	Issued
06.12.24	For Bid

Design Intent Drawings

©Babendure Design Group. All rights reserved. No part of this document may be reproduced or utilized in any form without prior written authorization from Babendure Design Group. This document serves as a device to communicate design intent only. Fabrication and installation of all products represented herein will be derived from the shop drawings produced by the project's contracted fabricator.

INT.104.1
Overhead Directional, 1-Line Suspended

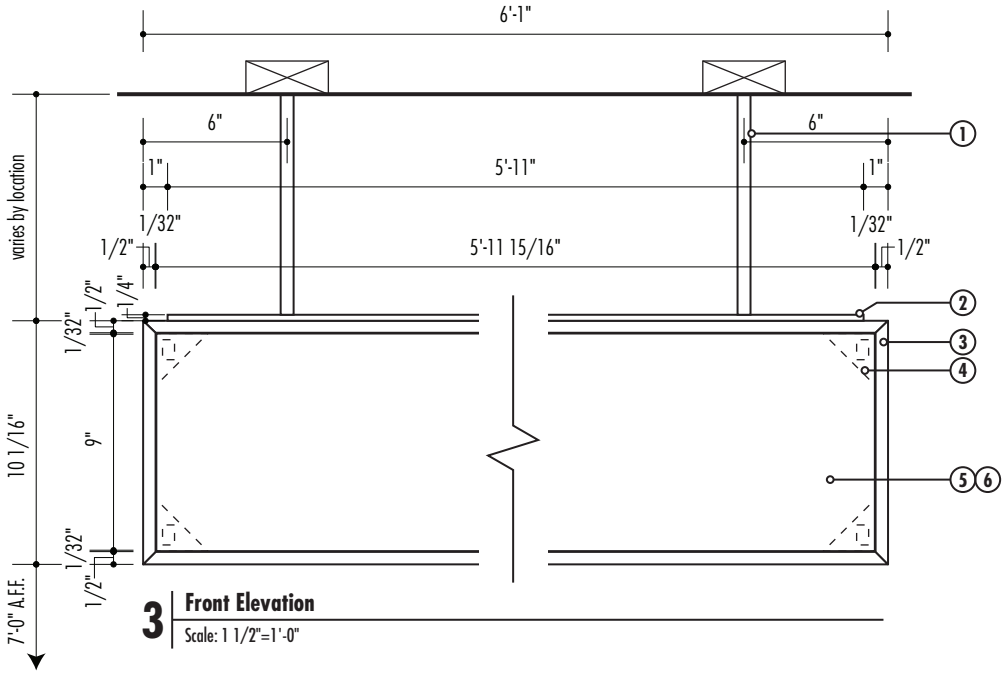

3 **Front Elevation**
Scale: 1 1/2"=1'-0"

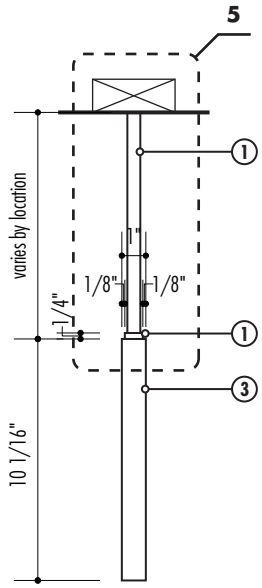

4 **Side Elevation**
Scale: 1 1/2"=1'-0"

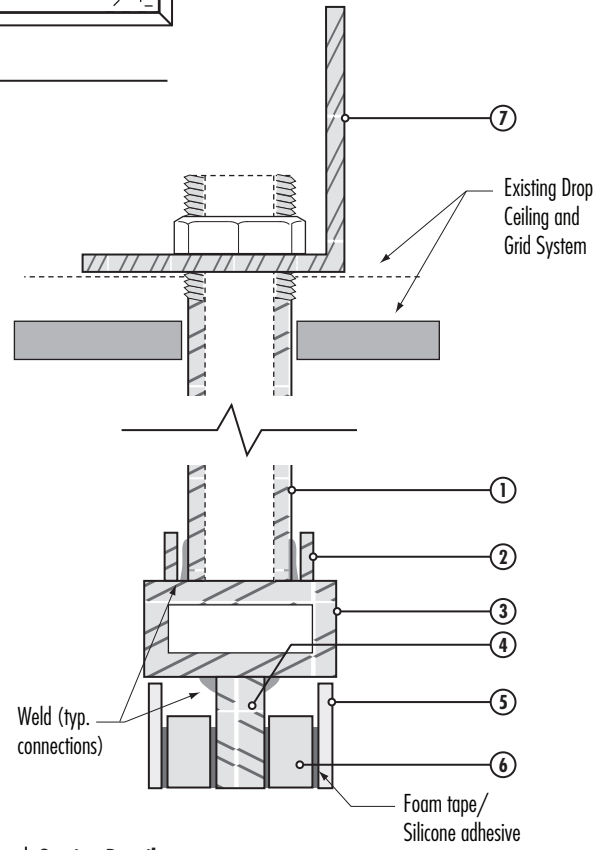

5 **Section Detail**
Scale: Full Size

1. 1/4" diameter schedule 40 pipe (.54" O.D.) painted to match P-33 Frame Silver, threaded on one end.

   Sign to be located at 7'- 0" to the bottom A.F.F.

2. 1/4" aluminum top plate painted to match P-33 Frame Silver with routed center section to conceal weld.

3. 1" x 1/2" aluminum frame painted to match P-33 Frame Silver.

4. 1/4" aluminum corner gusset.

5. 1/16" acrylic message panel painted to match P-12 Dark Gray. Provide necessary internal supports to keep panel from buckling or warping.

6. 1/4" acrylic build-up to hold message panel flush to frame.

7. Aluminum mounting angle above ceiling.

8. Applied vinyl text and symbols to match V-2 White. Font: ITC Franklin Gothic Std Medium Condensed.

9. Applied vinyl support text to match V-2 White. Font: ITC Franklin Gothic Std Book Condensed.

10. For EMERGENCY messages, background field painted to match P-5 Red.

    Fabricator to field verify ceiling conditions prior to fabrication.

Babendure Design Group
8140 Walnut Hill Ln. #950
Dallas, Texas 75231
214.265.1960
www.babendure.com

University Medical Center of El Paso
El Paso Children's

8th Floor Build Out
Contract Drawings

Date	Issued
06.12.24	For Bid

Design Intent Drawings

©Babendure Design Group. All rights reserved. No part of this document may be reproduced or utilized in any form without prior written authorization from Babendure Design Group. This document serves as a device to communicate design intent only. Fabrication and installation of all products represented herein will be derived from the shop drawings produced by the project's contracted fabricator.

INT.104.1
Overhead Directional, 1-Line Suspended

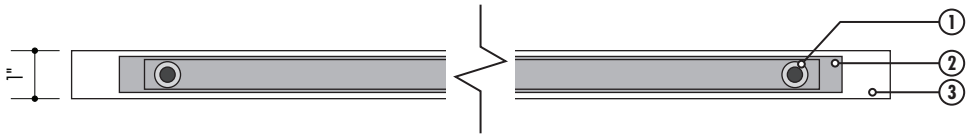

6 **Plan View**
Scale: 3"=1'-0"

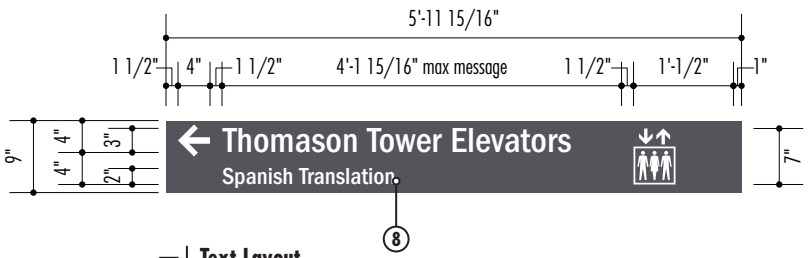

7 **Text Layout**
Scale: 1/2"=1'-0"

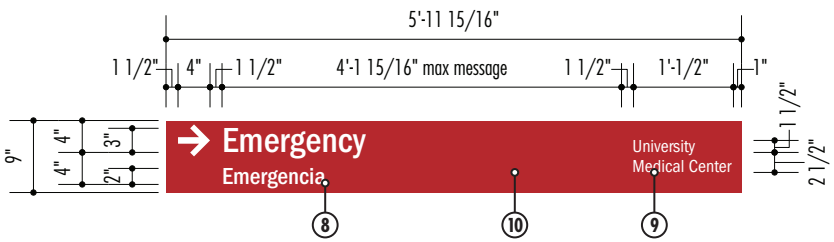

8 **Text Layout**
Scale: 1/2"=1'-0"

1. 1/4” diameter schedule 40 pipe (.54” O.D.) painted to match P-33 Frame Silver, threaded on one end.

   Sign to be located at 7’- 0” to the bottom A.F.F.

2. 1/4” aluminum top plate painted to match P-33 Frame Silver with routed center section to conceal weld.

3. 1” x 1/2” aluminum frame painted to match P-33 Frame Silver.

4. 1/4” aluminum corner gusset.

5. 1/16” acrylic message panel painted to match P-12 Dark Gray. Provide necessary internal supports to keep panel from buckling or warping.

6. 1/4” acrylic build-up to hold message panel flush to frame.

7. Aluminum mounting angle above ceiling.

8. Applied vinyl text and symbols to match V-2 White. Font: ITC Franklin Gothic Std Medium Condensed.

9. Applied vinyl support text to match V-2 White. Font: ITC Franklin Gothic Std Book Condensed.

10. For EMERGENCY messages, background field painted to match P-5 Red.

    Fabricator to field verify ceiling conditions prior to fabrication.

Babendure Design Group
8140 Walnut Hill Ln. #950
Dallas, Texas 75231
214.265.1960
www.babendure.com

University Medical Center of El Paso
El Paso Children’s

8th Floor Build Out
Contract Drawings

Date	Issued
06.12.24	For Bid

Design Intent Drawings

©Babendure Design Group. All rights reserved. No part of this document may be reproduced or utilized in any form without prior written authorization from Babendure Design Group. This document serves as a device to communicate design intent only. Fabrication and installation of all products represented herein will be derived from the shop drawings produced by the project’s contracted fabricator.

INT.104.1
Overhead Directional, 1-Line Suspended

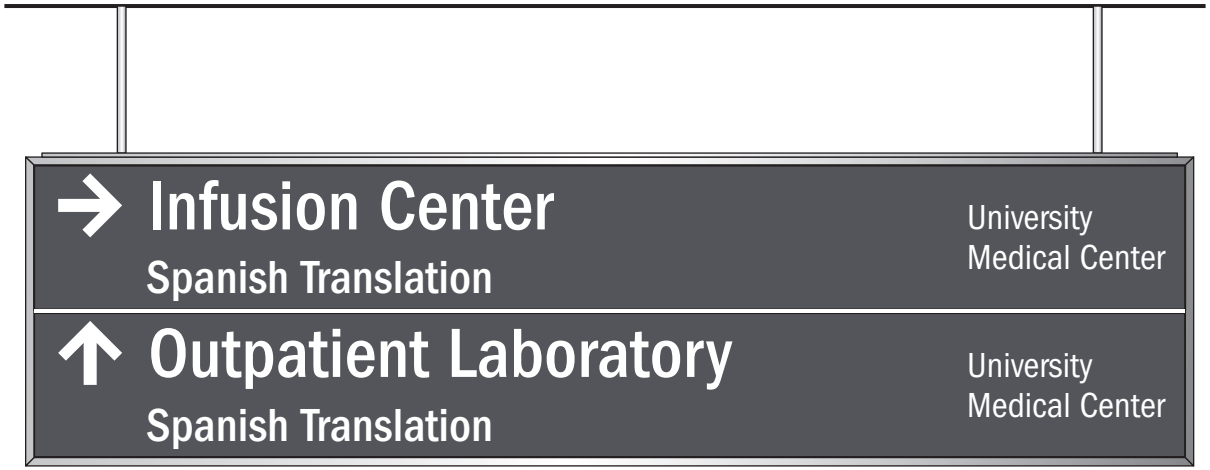

1 **INT.104.3 - Overhead Directional, 2-Line Suspended**

Scale: 1"=1'-0"

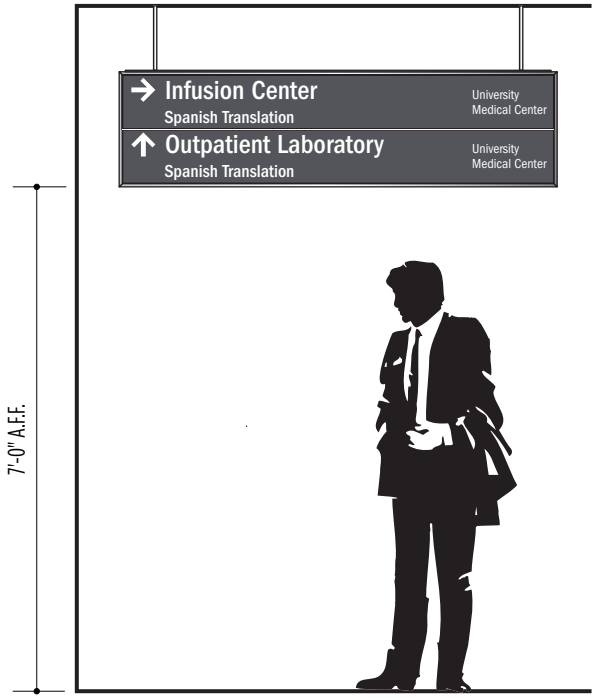

2 **Mounting Elevation**

Scale: 3/8"=1'-0"

1. 1/4" diameter schedule 40 pipe (.54" O.D.) painted to match P-33 Frame Silver, threaded on one end.

   Sign to be located at 7'- 0" to the bottom A.F.F.

2. 1/4" aluminum top plate painted to match P-33 Frame Silver with routed center section to conceal weld.

3. 1" x 1/2" aluminum frame painted to match P-33 Frame Silver.

4. 1/4" aluminum corner gusset.

5. 1/16" acrylic message panel painted to match P-12 Dark Gray. Provide necessary internal supports to keep panel from buckling or warping.

6. 1/4" acrylic build-up to hold message panel flush to frame.

7. Aluminum mounting angle above ceiling.

8. Applied vinyl text and symbols to match V-2 White. Font: ITC Franklin Gothic Std Medium Condensed.

9. Applied vinyl support text to match V-2 White. Font: ITC Franklin Gothic Std Book Condensed.

10. For EMERGENCY messages, background field painted to match P-5 Red.

    Fabricator to field verify ceiling conditions prior to fabrication.

Babendure Design Group
8140 Walnut Hill Ln. #950
Dallas, Texas 75231
214.265.1960
www.babendure.com

University Medical Center of El Paso
El Paso Children's

8th Floor Build Out
Contract Drawings

Date	Issued
06.12.24	For Bid

Design Intent Drawings

©Babendure Design Group. All rights reserved. No part of this document may be reproduced or utilized in any form without prior written authorization from Babendure Design Group. This document serves as a device to communicate design intent only. Fabrication and installation of all products represented herein will be derived from the shop drawings produced by the project's contracted fabricator.

INT.104.3
Overhead Directional, 2-Line Suspended

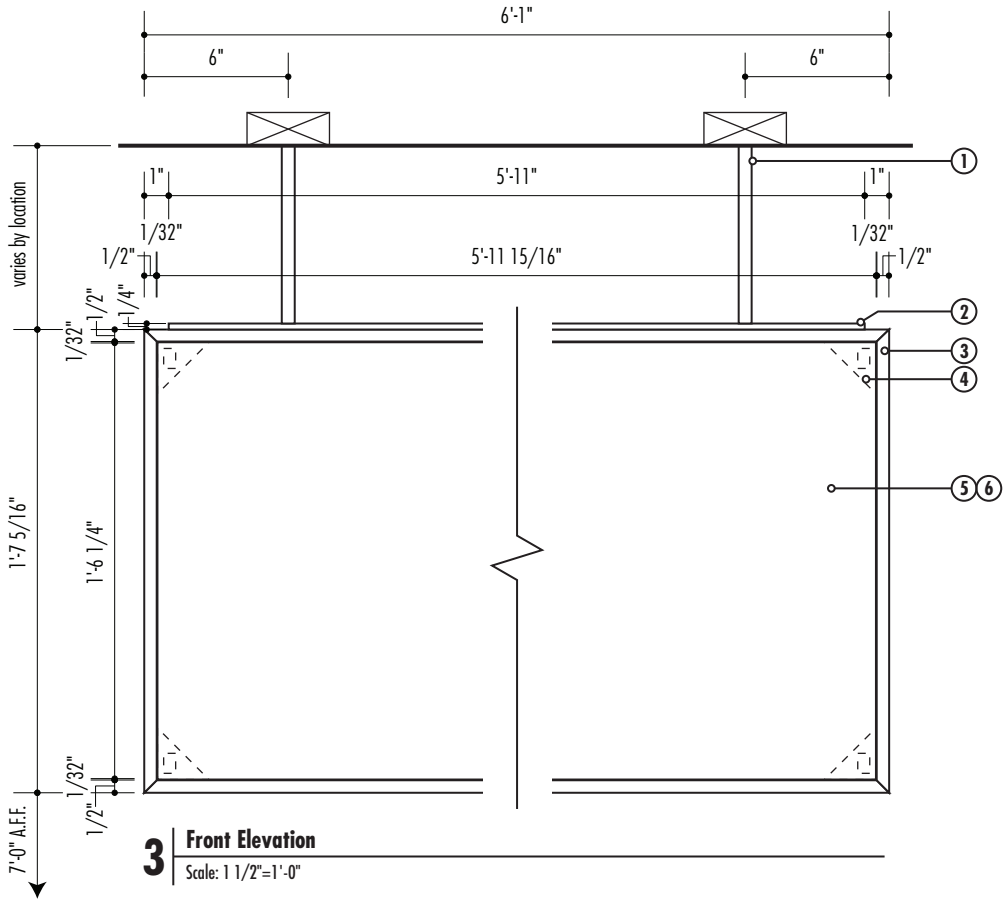

3 **Front Elevation**
Scale: 1 1/2"=1'-0"

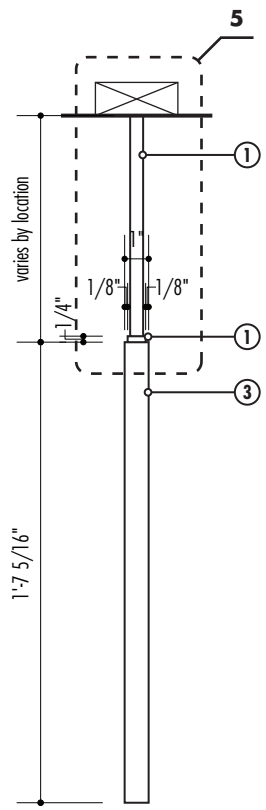

4 **Side Elevation**
Scale: 1 1/2"=1'-0"

1. 1/4" diameter schedule 40 pipe (.54" O.D.) painted to match P-33 Frame Silver, threaded on one end.

   Sign to be located at 7'- 0" to the bottom A.F.F.

2. 1/4" aluminum top plate painted to match P-33 Frame Silver with routed center section to conceal weld.

3. 1" x 1/2" aluminum frame painted to match P-33 Frame Silver.

4. 1/4" aluminum corner gusset.

5. 1/16" acrylic message panel painted to match P-12 Dark Gray. Provide necessary internal supports to keep panel from buckling or warping.

6. 1/4" acrylic build-up to hold message panel flush to frame.

7. Aluminum mounting angle above ceiling.

8. Applied vinyl text and symbols to match V-2 White. Font: ITC Franklin Gothic Std Medium Condensed.

9. Applied vinyl support text to match V-2 White. Font: ITC Franklin Gothic Std Book Condensed.

10. For EMERGENCY messages, background field painted to match P-5 Red.

    Fabricator to field verify ceiling conditions prior to fabrication.

Babendure Design Group
8140 Walnut Hill Ln. #950
Dallas, Texas 75231
214.265.1960
www.babendure.com

University Medical Center of El Paso
El Paso Children's

8th Floor Build Out
Contract Drawings

Date	Issued
06.12.24	For Bid

Design Intent Drawings

©Babendure Design Group. All rights reserved. No part of this document may be reproduced or utilized in any form without prior written authorization from Babendure Design Group. This document serves as a device to communicate design intent only. Fabrication and installation of all products represented herein will be derived from the shop drawings produced by the project's contracted fabricator.

INT.104.3
Overhead Directional, 2-Line Suspended

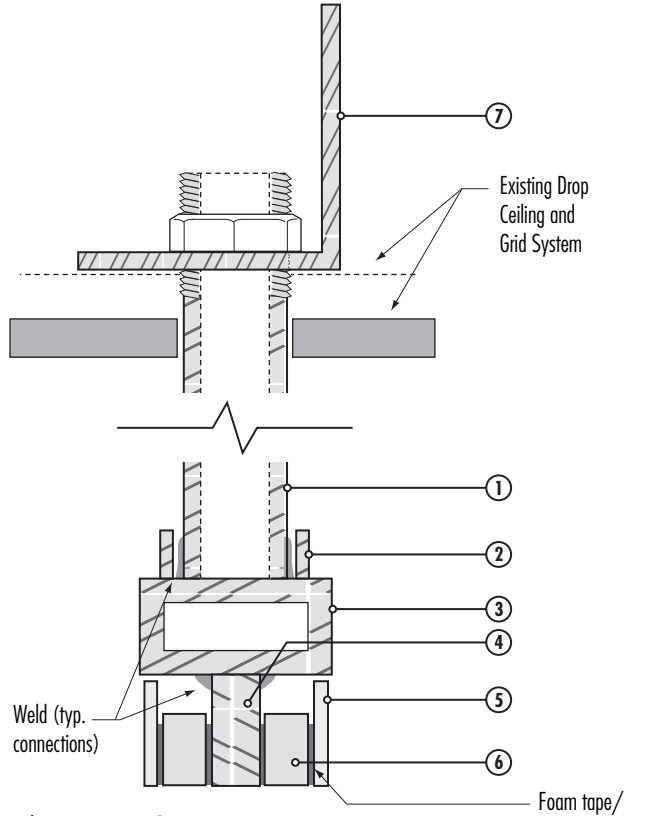

5 **Section Detail**
Scale: Full Size

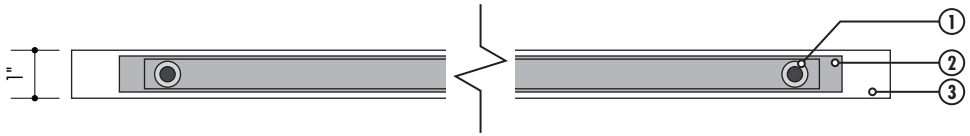

6 **Plan View**
Scale: 3"=1'-0"

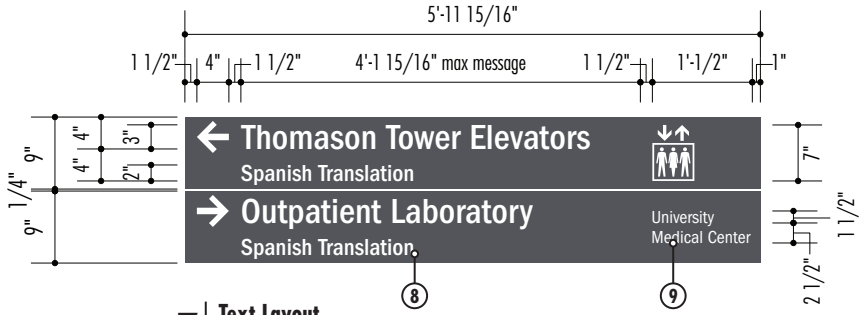

7 **Text Layout**
Scale: 1/2"=1'-0"

1. 1/4" diameter schedule 40 pipe (.54" O.D.) painted to match P-33 Frame Silver, threaded on one end.

   Sign to be located at 7'- 0" to the bottom A.F.F.

2. 1/4" aluminum top plate painted to match P-33 Frame Silver with routed center section to conceal weld.

3. 1" x 1/2" aluminum frame painted to match P-33 Frame Silver.

4. 1/4" aluminum corner gusset.

5. 1/16" acrylic message panel painted to match P-12 Dark Gray. Provide necessary internal supports to keep panel from buckling or warping.

6. 1/4" acrylic build-up to hold message panel flush to frame.

7. Aluminum mounting angle above ceiling.

8. Applied vinyl text and symbols to match V-2 White. Font: ITC Franklin Gothic Std Medium Condensed.

9. Applied vinyl support text to match V-2 White. Font: ITC Franklin Gothic Std Book Condensed.

10. For EMERGENCY messages, background field painted to match P-5 Red.

    Fabricator to field verify ceiling conditions prior to fabrication.

Babendure Design Group
8140 Walnut Hill Ln. #950
Dallas, Texas 75231
214.265.1960
www.babendure.com

University Medical Center of El Paso
El Paso Children's

8th Floor Build Out
Contract Drawings

Date	Issued
06.12.24	For Bid

Design Intent Drawings

©Babendure Design Group. All rights reserved. No part of this document may be reproduced or utilized in any form without prior written authorization from Babendure Design Group. This document serves as a device to communicate design intent only. Fabrication and installation of all products represented herein will be derived from the shop drawings produced by the project's contracted fabricator.

INT.104.3
Overhead Directional, 2-Line Suspended

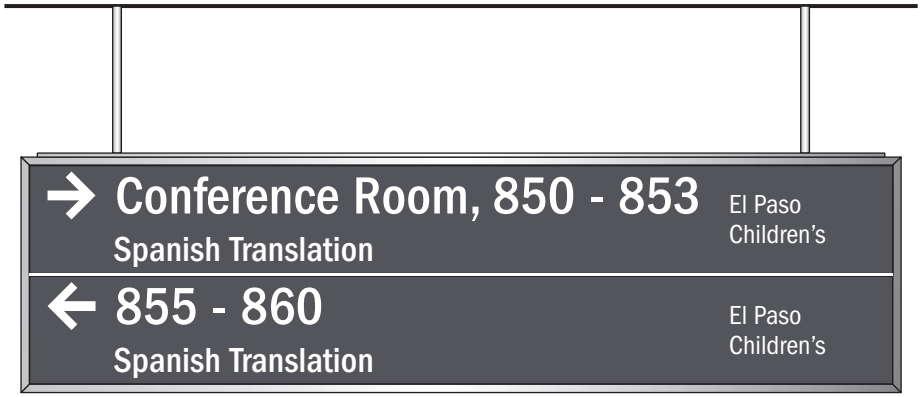

1 **INT.104.5 - Overhead Directional, 2-Line Suspended Small**
Scale: 1"=1'-0"

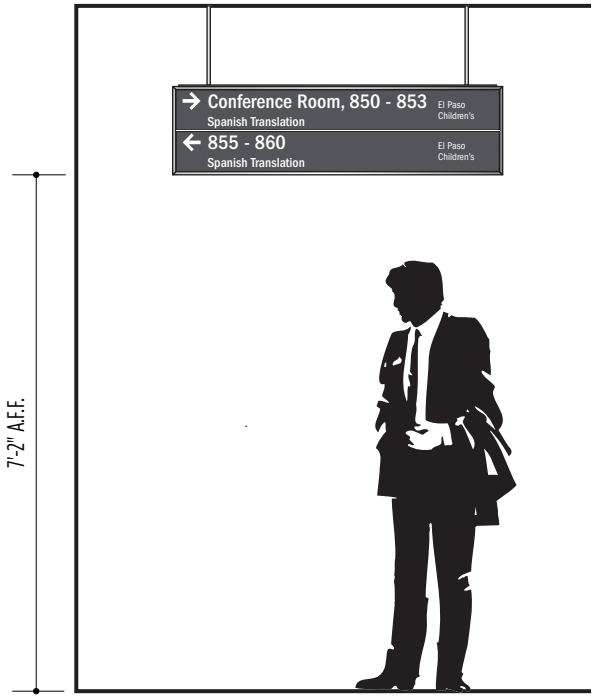

2 **Mounting Elevation**
Scale: 3/8"=1'-0"

1. 1/4" diameter schedule 40 pipe (.54" O.D.) painted to match P-33 Frame Silver, threaded on one end.

   Sign to be located at 7'- 0" to the bottom A.F.F.

2. 1/4" aluminum top plate painted to match P-33 Frame Silver with routed center section to conceal weld.

3. 1" x 1/2" aluminum frame painted to match P-33 Frame Silver.

4. 1/4" aluminum corner gusset.

5. 1/16" acrylic message panel painted to match P-12 Dark Gray. Provide necessary internal supports to keep panel from buckling or warping.

6. 1/4" acrylic build-up to hold message panel flush to frame.

7. Aluminum mounting angle above ceiling.

8. Applied vinyl text and symbols to match V-2 White. Font: ITC Franklin Gothic Std Medium Condensed.

9. Applied vinyl support text to match V-2 White. Font: ITC Franklin Gothic Std Book Condensed.

10. For EMERGENCY messages, background field painted to match P-5 Red.

    Fabricator to field verify ceiling conditions prior to fabrication.

Babendure Design Group
8140 Walnut Hill Ln. #950
Dallas, Texas 75231
214.265.1960
www.babendure.com

University Medical Center of El Paso
El Paso Children's

8th Floor Build Out
Contract Drawings

Date	Issued
06.12.24	For Bid

Design Intent Drawings

©Babendure Design Group. All rights reserved. No part of this document may be reproduced or utilized in any form without prior written authorization from Babendure Design Group. This document serves as a device to communicate design intent only. Fabrication and installation of all products represented herein will be derived from the shop drawings produced by the project's contracted fabricator.

INT.104.5
Overhead Directional, 2-Line Suspended Small

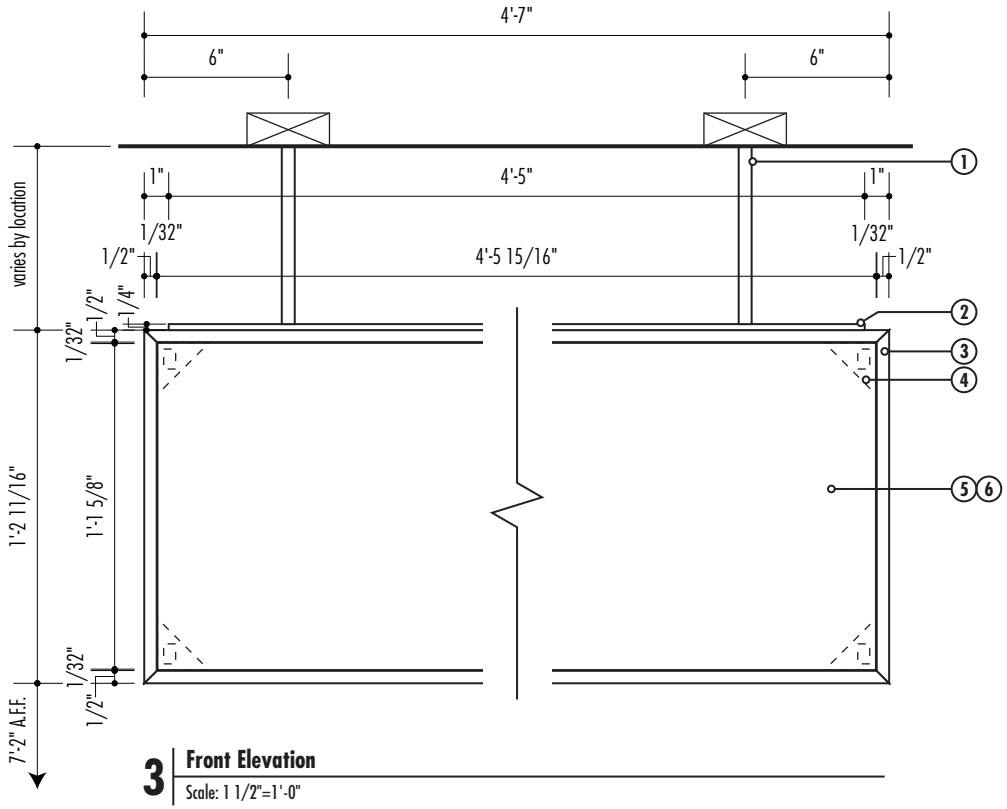

3 **Front Elevation**
Scale: 1 1/2"=1'-0"

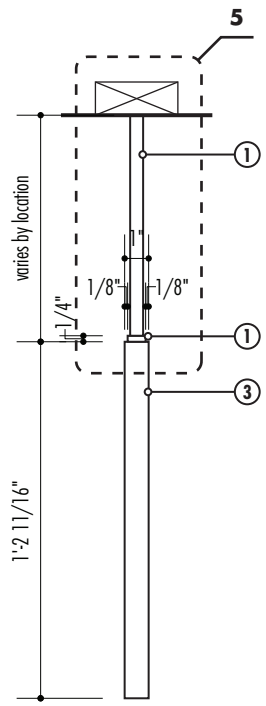

4 **Side Elevation**
Scale: 1 1/2"=1'-0"

1. 1/4" diameter schedule 40 pipe (.54" O.D.) painted to match P-33 Frame Silver, threaded on one end.

   Sign to be located at 7'- 0" to the bottom A.F.F.

2. 1/4" aluminum top plate painted to match P-33 Frame Silver with routed center section to conceal weld.

3. 1" x 1/2" aluminum frame painted to match P-33 Frame Silver.

4. 1/4" aluminum corner gusset.

5. 1/16" acrylic message panel painted to match P-12 Dark Gray. Provide necessary internal supports to keep panel from buckling or warping.

6. 1/4" acrylic build-up to hold message panel flush to frame.

7. Aluminum mounting angle above ceiling.

8. Applied vinyl text and symbols to match V-2 White. Font: ITC Franklin Gothic Std Medium Condensed.

9. Applied vinyl support text to match V-2 White. Font: ITC Franklin Gothic Std Book Condensed.

10. For EMERGENCY messages, background field painted to match P-5 Red.

    Fabricator to field verify ceiling conditions prior to fabrication.

Babendure Design Group
8140 Walnut Hill Ln. #950
Dallas, Texas 75231
214.265.1960
www.babendure.com

University Medical Center of El Paso
El Paso Children's

8th Floor Build Out
Contract Drawings

Date	Issued
06.12.24	For Bid

Design Intent Drawings

©Babendure Design Group. All rights reserved. No part of this document may be reproduced or utilized in any form without prior written authorization from Babendure Design Group. This document serves as a device to communicate design intent only. Fabrication and installation of all products represented herein will be derived from the shop drawings produced by the project's contracted fabricator.

INT.104.5
Overhead Directional, 2-Line Suspended Small

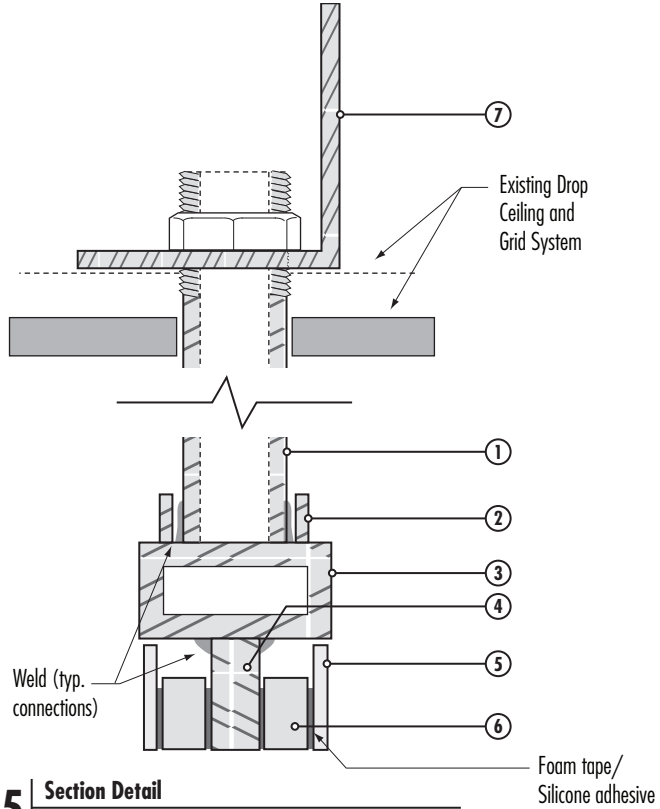

5 **Section Detail**
Scale: Full Size

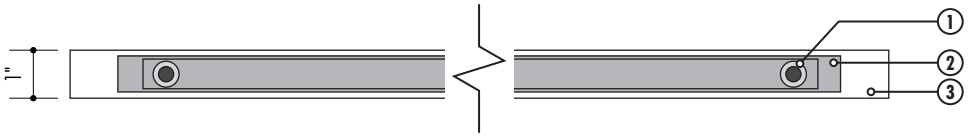

6 **Plan View**
Scale: 3"=1'-0"

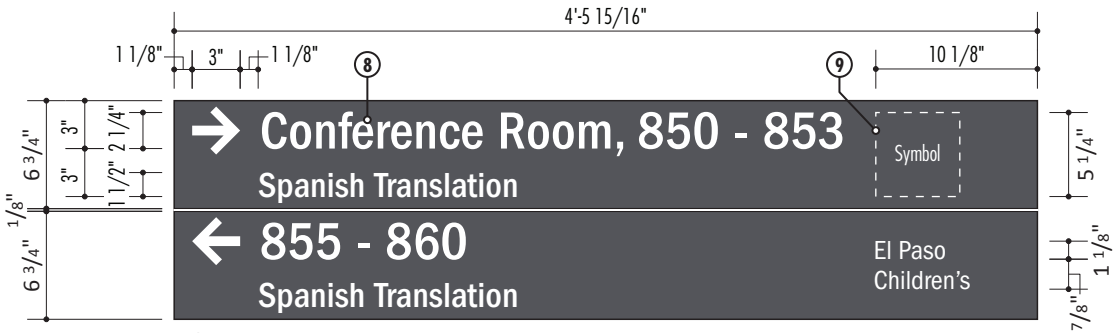

7 **Text Layout**
Scale: 1"=1'-0"

1. 1/4" diameter schedule 40 pipe (.54" O.D.) painted to match P-33 Frame Silver, threaded on one end.

   Sign to be located at 7'- 0" to the bottom A.F.F.

2. 1/4" aluminum top plate painted to match P-33 Frame Silver with routed center section to conceal weld.

3. 1" x 1/2" aluminum frame painted to match P-33 Frame Silver.

4. 1/4" aluminum corner gusset.

5. 1/16" acrylic message panel painted to match P-12 Dark Gray. Provide necessary internal supports to keep panel from buckling or warping.

6. 1/4" acrylic build-up to hold message panel flush to frame.

7. Aluminum mounting angle above ceiling.

8. Applied vinyl text and symbols to match V-2 White. Font: ITC Franklin Gothic Std Medium Condensed.

9. Applied vinyl support text to match V-2 White. Font: ITC Franklin Gothic Std Book Condensed.

10. For EMERGENCY messages, background field painted to match P-5 Red.

    Fabricator to field verify ceiling conditions prior to fabrication.

Babendure Design Group
8140 Walnut Hill Ln. #950
Dallas, Texas 75231
214.265.1960
www.babendure.com

University Medical Center of El Paso
El Paso Children's

8th Floor Build Out
Contract Drawings

Date	Issued
06.12.24	For Bid

Design Intent Drawings

©Babendure Design Group. All rights reserved. No part of this document may be reproduced or utilized in any form without prior written authorization from Babendure Design Group. This document serves as a device to communicate design intent only. Fabrication and installation of all products represented herein will be derived from the shop drawings produced by the project's contracted fabricator.

INT.104.5
Overhead Directional, 2-Line Suspended Small

1 **INT.105 - Typical Room Identity**
Scale: 3"=1'-0"

2 **Mounting Elevation**
Scale: 3/8"=1'-0"

1. "Premier Plus" aluminum extrusion frame part number "2040 Boxed" with 5/16" inside depth and satin silver finish as provided by The JRS Company. (Or approved equal.)

   Complete assembly to be mounted with low-VOC thin-mil VHB Tape and low-VOC silicone adhesive. Sign to be located at 5'- 0" to center A.F.F. and 3" from strike side of door.

   Provide vinyl backup plate to match V-5 Satin Aluminum for glass-mount conditions.

   The JRS Company
   www.jrscoinc.com

2. Semi-flexible .080" non-glare Lexan lens with tabs to secure into frame, removable with section cup.

3. Acrylic filler panel, leaving space for changeable acetate insert. Visible edge painted to match P-11 Light Gray.

4. 1/8" "Premier Plus" divider with satin silver finish, permanently mounted in frame.

5. 1/16" photopolymer painted to match P-12 Dark Gray and laminated to moisture-resistant filler panel to sit flush with frame. Raised text painted to match P-11 Light Gray. Font: ITC Franklin Gothic Std Medium Condensed.

6. Masonite backer.

7. Digital print on opaque white substrate, laminated to backer to keep digital print flush to face without ripples or buckling. Inserted behind Lexan face:
   Orajet 3951 digital print media substrate, 2 mil cast film, semi-gloss - CMYK color pallet.

   Message field of digital print to match I-11 Light Gray with decorative rule lines to match I-3 White and text to match I-13 Pale Purple. Font: ITC Franklin Gothic Std Medium Condensed.

8. "Do Not Enter" symbol field to match I-5 Red with bar to match I-3 White.

Babendure Design Group
8140 Walnut Hill Ln. #950
Dallas, Texas 75231
214.265.1960
www.babendure.com

University Medical Center of El Paso
El Paso Children's

8th Floor Build Out
Contract Drawings

Date	Issued
06.12.24	For Bid

Design Intent Drawings

©Babendure Design Group. All rights reserved. No part of this document may be reproduced or utilized in any form without prior written authorization from Babendure Design Group. This document serves as a device to communicate design intent only. Fabrication and installation of all products represented herein will be derived from the shop drawings produced by the project's contracted fabricator.

INT.105
Typical Room Identity

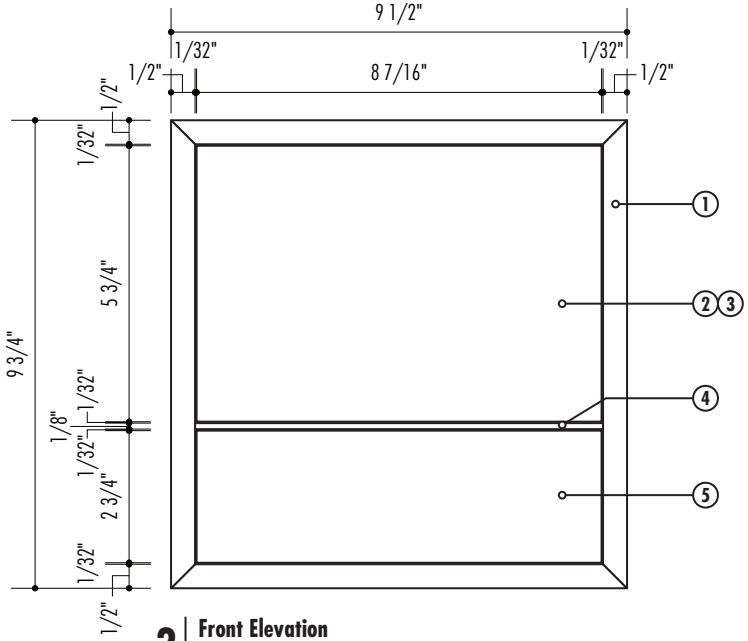

3 **Front Elevation**
Scale: 3"=1'-0"

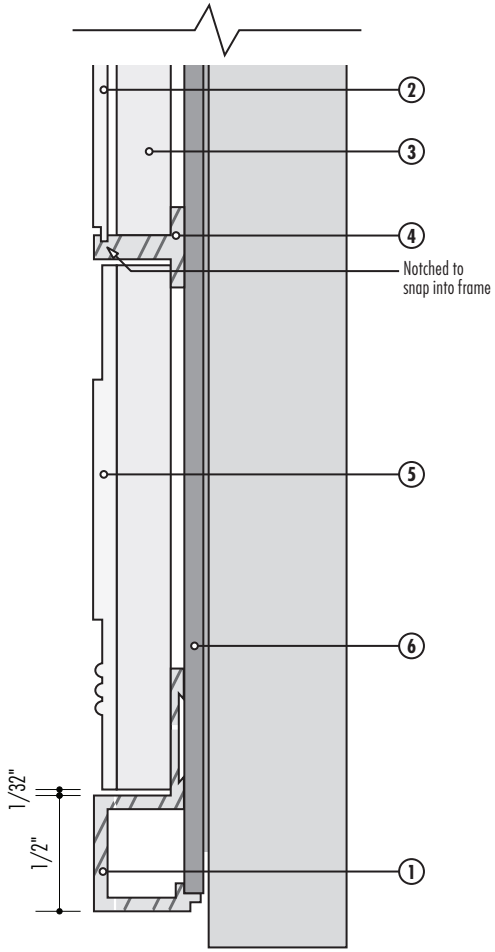

4 **Detail - Frame Section**
Scale: Full Size

1. "Premier Plus" aluminum extrusion frame part number "2040 Boxed" with 5/16" inside depth and satin silver finish as provided by The JRS Company. (Or approved equal.)

   Complete assembly to be mounted with low-VOC thin-mil VHB Tape and low-VOC silicone adhesive. Sign to be located at 5'- 0" to center A.F.F. and 3" from strike side of door.

   Provide vinyl backup plate to match V-5 Satin Aluminum for glass-mount conditions.

   The JRS Company
   www.jrscoinc.com

2. Semi-flexible .080" non-glare Lexan lens with tabs to secure into frame, removable with section cup.

3. Acrylic filler panel, leaving space for changeable acetate insert. Visible edge painted to match P-11 Light Gray.

4. 1/8" "Premier Plus" divider with satin silver finish, permanently mounted in frame.

5. 1/16" photopolymer painted to match P-12 Dark Gray and laminated to moisture-resistant filler panel to sit flush with frame. Raised text painted to match P-11 Light Gray. Font: ITC Franklin Gothic Std Medium Condensed.

6. Masonite backer.

7. Digital print on opaque white substrate, laminated to backer to keep digital print flush to face without ripples or buckling. Inserted behind Lexan face:
   Orajet 3951 digital print media substrate, 2 mil cast film, semi-gloss - CMYK color pallet.

   Message field of digital print to match I-11 Light Gray with decorative rule lines to match I-3 White and text to match I-13 Pale Purple. Font: ITC Franklin Gothic Std Medium Condensed.

8. "Do Not Enter" symbol field to match I-5 Red with bar to match I-3 White.

Babendure Design Group
8140 Walnut Hill Ln. #950
Dallas, Texas 75231
214.265.1960
www.babendure.com

University Medical Center of El Paso
El Paso Children's

8th Floor Build Out
Contract Drawings

Date	Issued
06.12.24	For Bid

Design Intent Drawings

©Babendure Design Group. All rights reserved. No part of this document may be reproduced or utilized in any form without prior written authorization from Babendure Design Group. This document serves as a device to communicate design intent only. Fabrication and installation of all products represented herein will be derived from the shop drawings produced by the project's contracted fabricator.

INT.105
Typical Room Identity

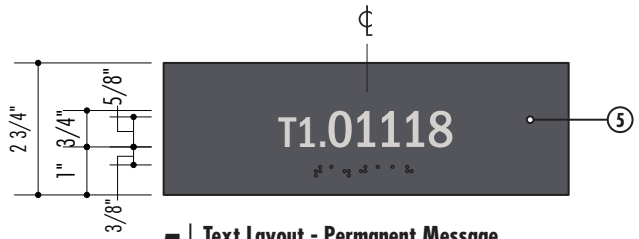

5 Text Layout - Permanent Message
Scale: 3"=1'-0"

Standard layout style.

When the English and Spanish messages are the same, use this layout style to prevent duplication.

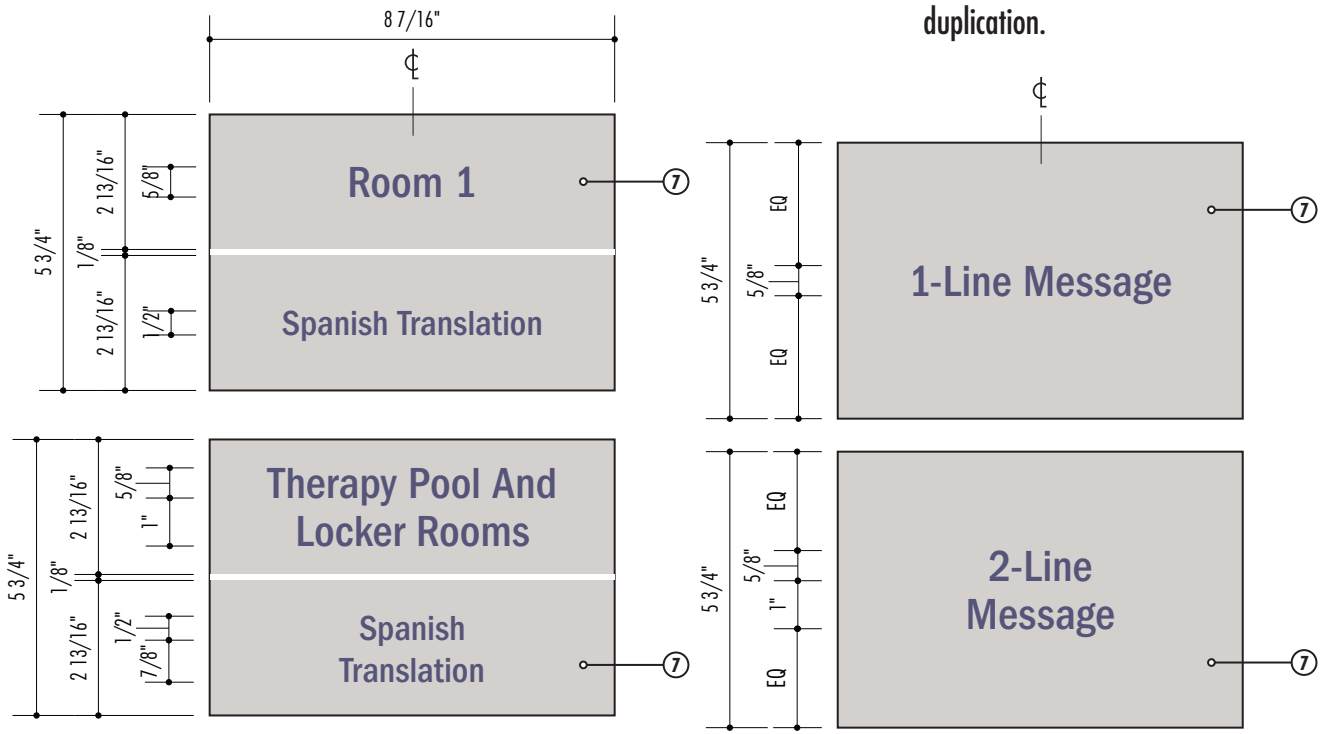

A Text Layout - Changeable Message - Style A
Scale: 3"=1'-0"

B Text Layout - Changeable Message - Style B
Scale: 3"=1'-0"

1. "Premier Plus" aluminum extrusion frame part number "2040 Boxed" with 5/16" inside depth and satin silver finish as provided by The JRS Company. (Or approved equal.)

   Complete assembly to be mounted with low-VOC thin-mil VHB Tape and low-VOC silicone adhesive. Sign to be located at 5'- 0" to center A.F.F. and 3" from strike side of door.

   Provide vinyl backup plate to match V-5 Satin Aluminum for glass-mount conditions.

   The JRS Company
   www.jrscoinc.com

2. Semi-flexible .080" non-glare Lexan lens with tabs to secure into frame, removable with section cup.

3. Acrylic filler panel, leaving space for changeable acetate insert. Visible edge painted to match P-11 Light Gray.

4. 1/8" "Premier Plus" divider with satin silver finish, permanently mounted in frame.

5. 1/16" photopolymer painted to match P-12 Dark Gray and laminated to moisture-resistant filler panel to sit flush with frame. Raised text painted to match P-11 Light Gray. Font: ITC Franklin Gothic Std Medium Condensed.

6. Masonite backer.

7. Digital print on opaque white substrate, laminated to backer to keep digital print flush to face without ripples or buckling. Inserted behind Lexan face: Orajet 3951 digital print media substrate, 2 mil cast film, semi-gloss - CMYK color pallet.

   Message field of digital print to match I-11 Light Gray with decorative rule lines to match I-3 White and text to match I-13 Pale Purple. Font: ITC Franklin Gothic Std Medium Condensed.

8. "Do Not Enter" symbol field to match I-5 Red with bar to match I-3 White.

Babendure Design Group
8140 Walnut Hill Ln. #950
Dallas, Texas 75231
214.265.1960
www.babendure.com

University Medical Center of El Paso
El Paso Children's

8th Floor Build Out
Contract Drawings

Date	Issued
06.12.24	For Bid

Design Intent Drawings

©Babendure Design Group. All rights reserved. No part of this document may be reproduced or utilized in any form without prior written authorization from Babendure Design Group. This document serves as a device to communicate design intent only. Fabrication and installation of all products represented herein will be derived from the shop drawings produced by the project's contracted fabricator.

INT.105
Typical Room Identity

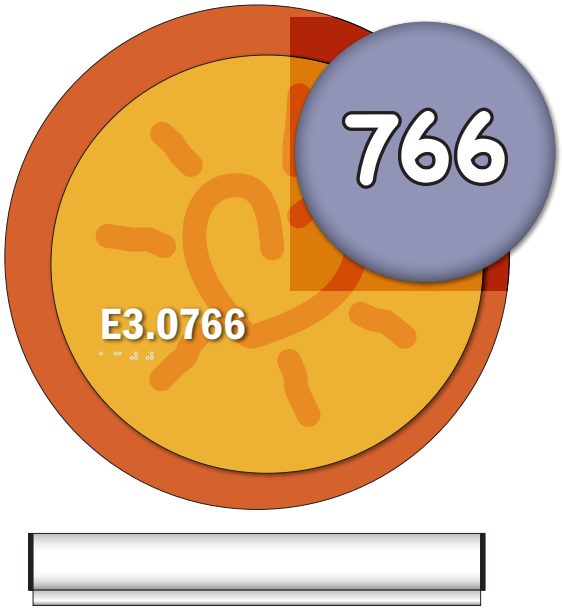

1 **INT.108.2 - Patient Room Identity, Child**
Scale: 3"=1'-0"

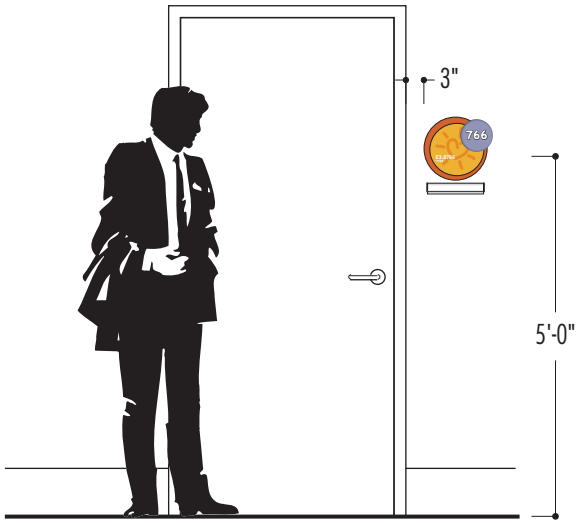

2 **Mounting Elevation**
Scale: 3/8"=1'-0"

1. 1/4" acrylic with rounded-over edges, painted on all visible sides to match P-19 Light Purple. Room number screen printed to match P-3 White and 1/16" outer stroke to match P-4 Black. Font: Chalkboard Bold.

2. 1/8" clear photopolymer with second surface sun pattern to match P-17 Medium Orange and P-16 Light Orange. Raised text painted to match P-3 White. Font: ITC Franklin Gothic Std Medium Condensed.

3. "1/2" acrylic painted on all visible sides to match P-18 Dark Orange.

4. 8' long Grip-A-Strip gripper bar in satin finish, part number "2015" as provided by Advantus Corp, cut and capped on both ends to a 9 1/2" length.

   Advantus Corp.
   www.advantus.com

5. 1/8" black acrylic backplate inset 1/4" from the edge on all sides.

   Provide vinyl backup plate to match V-5 Satin Aluminum for glass-mount conditions.

   Complete assembly to be mounted with low-VOC thin-mil VHB Tape and low-VOC silicone adhesive. Sign to be located at 5'- 0" to center A.F.F. and 3" from strike side of door.

Babendure Design Group
8140 Walnut Hill Ln. #950
Dallas, Texas 75231
214.265.1960
www.babendure.com

University Medical Center of El Paso
El Paso Children's

8th Floor Build Out
Contract Drawings

Date	Issued
06.12.24	For Bid

Design Intent Drawings

©Babendure Design Group. All rights reserved. No part of this document may be reproduced or utilized in any form without prior written authorization from Babendure Design Group. This document serves as a device to communicate design intent only. Fabrication and installation of all products represented herein will be derived from the shop drawings produced by the project's contracted fabricator.

INT.108.2
Patient Room Identity, Child

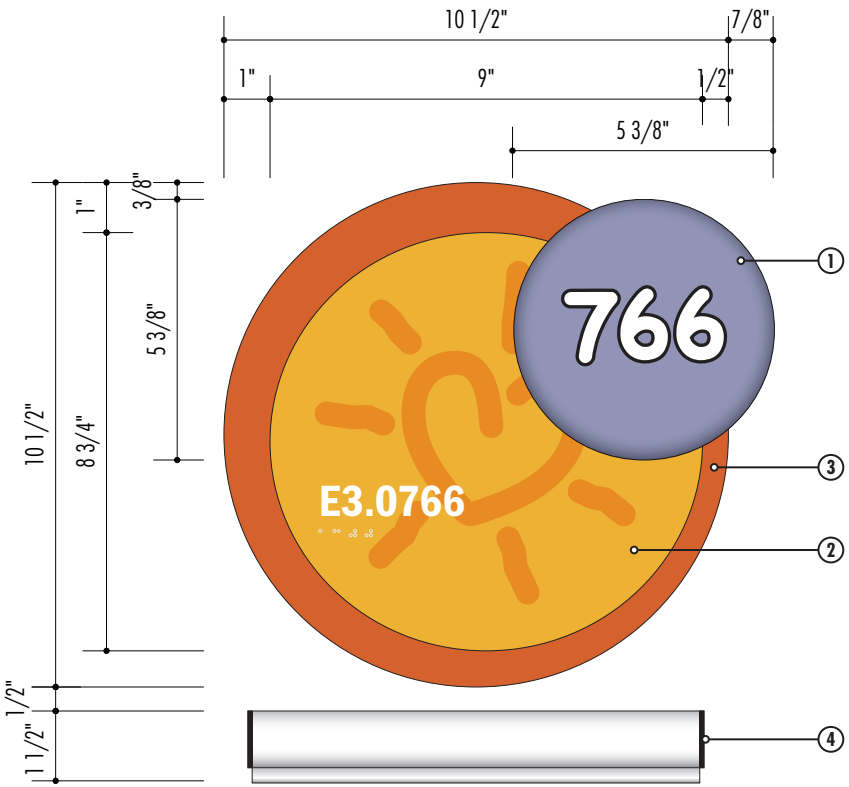

3 **Front Elevation**
Scale: 3"=1'-0"

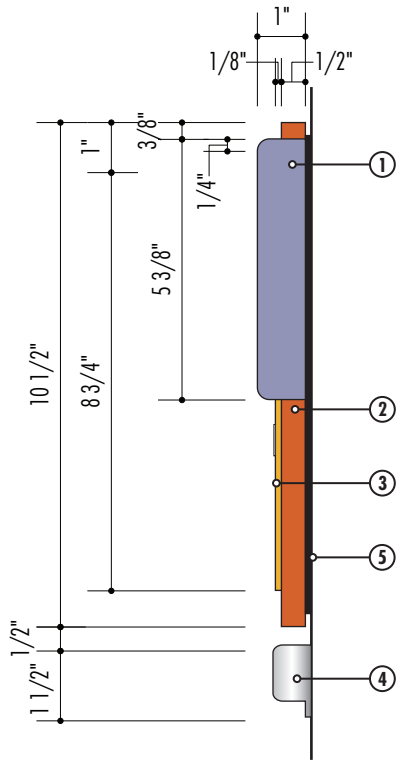

4 **Side Elevation**
Scale: 3"=1'-0"

1. 1/4" acrylic with rounded-over edges, painted on all visible sides to match P-19 Light Purple. Room number screen printed to match P-3 White and 1/16" outer stroke to match P-4 Black. Font: Chalkboard Bold.

2. 1/8" clear photopolymer with second surface sun pattern to match P-17 Medium Orange and P-16 Light Orange. Raised text painted to match P-3 White. Font: ITC Franklin Gothic Std Medium Condensed.

3. "1/2" acrylic painted on all visible sides to match P-18 Dark Orange.

4. 8' long Grip-A-Strip gripper bar in satin finish, part number "2015" as provided by Advantus Corp, cut and capped on both ends to a 9 1/2" length.

   Advantus Corp.
   www.advantus.com

5. 1/8" black acrylic backplate inset 1/4" from the edge on all sides.

   Provide vinyl backup plate to match V-5 Satin Aluminum for glass-mount conditions.

   Complete assembly to be mounted with low-VOC thin-mil VHB Tape and low-VOC silicone adhesive. Sign to be located at 5'- 0" to center A.F.F. and 3" from strike side of door.

Babendure Design Group
8140 Walnut Hill Ln. #950
Dallas, Texas 75231
214.265.1960
www.babendure.com

University Medical Center of El Paso
El Paso Children's

8th Floor Build Out
Contract Drawings

Date	Issued
06.12.24	For Bid

Design Intent Drawings

©Babendure Design Group. All rights reserved. No part of this document may be reproduced or utilized in any form without prior written authorization from Babendure Design Group. This document serves as a device to communicate design intent only. Fabrication and installation of all products represented herein will be derived from the shop drawings produced by the project's contracted fabricator.

INT.108.2
Patient Room Identity, Child

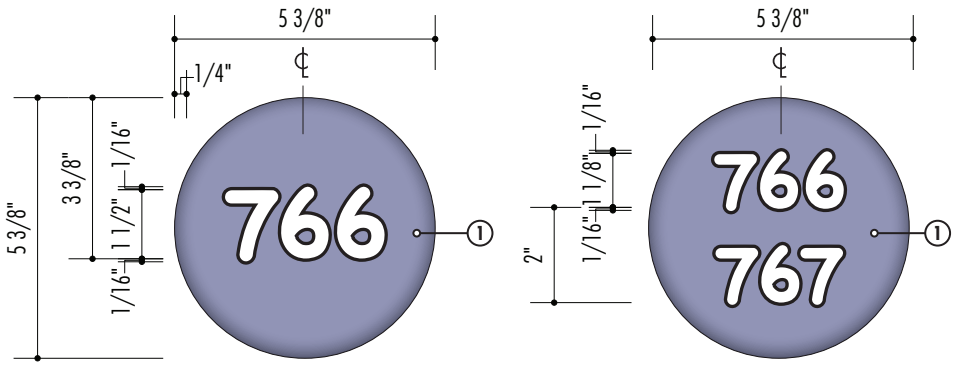

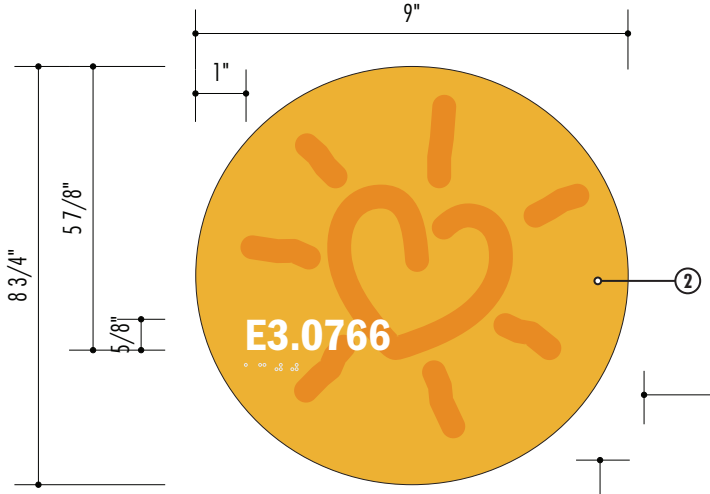

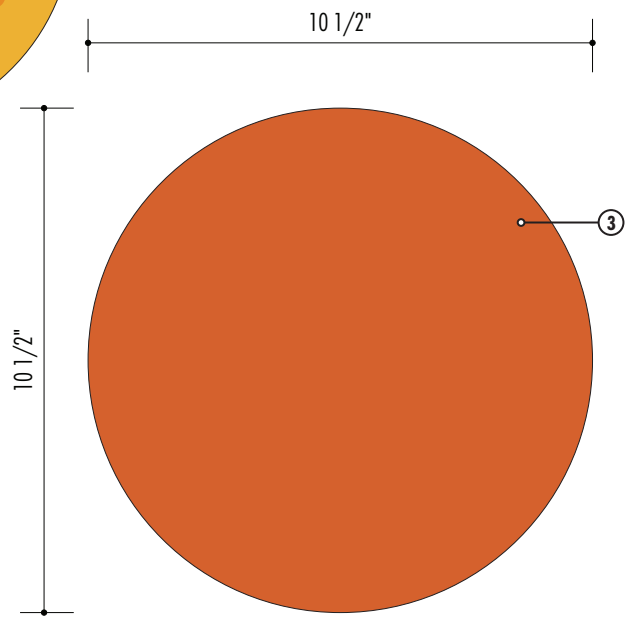

1. 1/4" acrylic with rounded-over edges, painted on all visible sides to match P-19 Light Purple. Room number screen printed to match P-3 White and 1/16" outer stroke to match P-4 Black. Font: Chalkboard Bold.

2. 1/8" clear photopolymer with second surface sun pattern to match P-17 Medium Orange and P-16 Light Orange. Raised text painted to match P-3 White. Font: ITC Franklin Gothic Std Medium Condensed.

3. "1/2" acrylic painted on all visible sides to match P-18 Dark Orange.

4. 8' long Grip-A-Strip gripper bar in satin finish, part number "2015" as provided by Advantus Corp, cut and capped on both ends to a 9 1/2" length.

   Advantus Corp.
   www.advantus.com

5. 1/8" black acrylic backplate inset 1/4" from the edge on all sides.

   Provide vinyl backup plate to match V-5 Satin Aluminum for glass-mount conditions.

   Complete assembly to be mounted with low-VOC thin-mil VHB Tape and low-VOC silicone adhesive. Sign to be located at 5'- 0" to center A.F.F. and 3" from strike side of door.

5 **Detail - Layers**
Scale: Full Size

Babendure Design Group
8140 Walnut Hill Ln. #950
Dallas, Texas 75231
214.265.1960
www.babendure.com

University Medical Center of El Paso
El Paso Children's

8th Floor Build Out
Contract Drawings

Date	Issued
06.12.24	For Bid

Design Intent Drawings

©Babendure Design Group. All rights reserved. No part of this document may be reproduced or utilized in any form without prior written authorization from Babendure Design Group. This document serves as a device to communicate design intent only. Fabrication and installation of all products represented herein will be derived from the shop drawings produced by the project's contracted fabricator.

INT.108.2
Patient Room Identity, Child

1 **INT.109 - Restroom Identity**
Scale: 3"=1'-0"

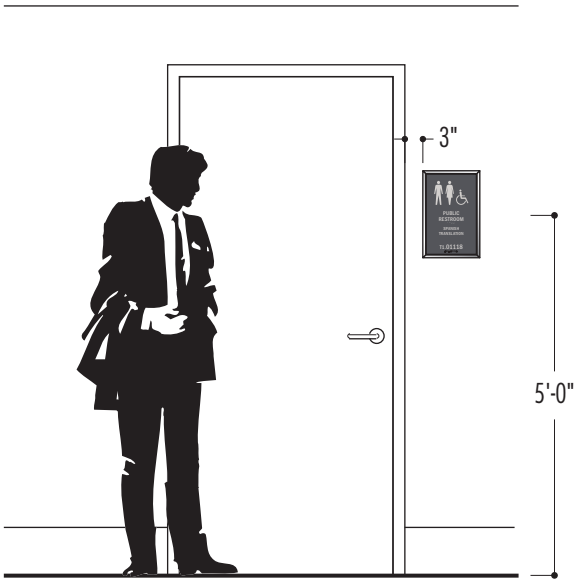

2 **Mounting Elevation**
Scale: 3/8"=1'-0"

1. "Premier Plus" aluminum extrusion frame part number "2040 Boxed" with 5/16" inside depth and satin silver finish as provided by The JRS Company. (Or approved equal.)

   Complete assembly to be mounted with low-VOC thin-mil VHB Tape and low-VOC silicone adhesive. Sign to be located at 5'- 0" to center A.F.F. and 3" from strike side of door.

   Provide vinyl backup plate to match V-5 Satin Aluminum for glass-mount conditions.

   The JRS Company
   www.jrscoinc.com

2. 1/16" photopolymer painted to match P-12 Dark Gray and laminated to moisture-resistant filler panel to sit flush with frame. Raised text painted to match P-11 Light Gray. Font: ITC Franklin Gothic Std Medium Condensed.

3. Masonite backer.

Babendure Design Group
8140 Walnut Hill Ln. #950
Dallas, Texas 75231
214.265.1960
www.babendure.com

University Medical Center of El Paso
El Paso Children's

8th Floor Build Out
Contract Drawings

Date	Issued
06.12.24	For Bid

Design Intent Drawings

©Babendure Design Group. All rights reserved. No part of this document may be reproduced or utilized in any form without prior written authorization from Babendure Design Group. This document serves as a device to communicate design intent only. Fabrication and installation of all products represented herein will be derived from the shop drawings produced by the project's contracted fabricator.

INT.109
Restroom Identity

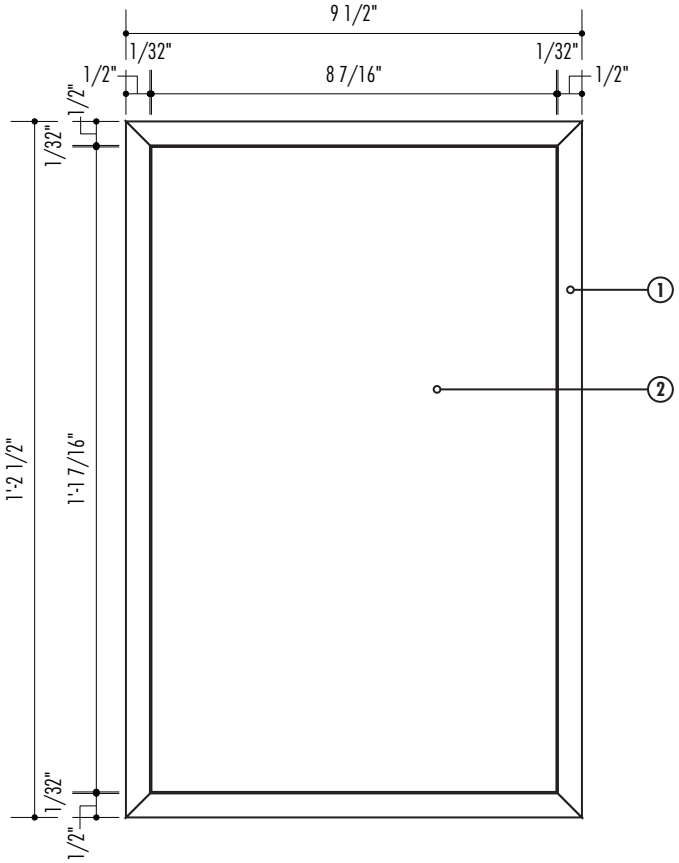

3 **Front Elevation**
Scale: 3"=1'-0"

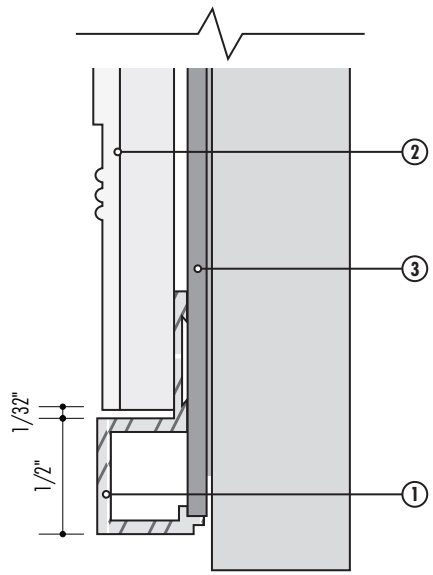

4 **Detail - Frame Section**
Scale: Full Size

1. "Premier Plus" aluminum extrusion frame part number "2040 Boxed" with 5/16" inside depth and satin silver finish as provided by The JRS Company. (Or approved equal.)

   Complete assembly to be mounted with low-VOC thin-mil VHB Tape and low-VOC silicone adhesive. Sign to be located at 5'- 0" to center A.F.F. and 3" from strike side of door.

   Provide vinyl backup plate to match V-5 Satin Aluminum for glass-mount conditions.

   The JRS Company
   www.jrscoinc.com

2. 1/16" photopolymer painted to match P-12 Dark Gray and laminated to moisture-resistant filler panel to sit flush with frame. Raised text painted to match P-11 Light Gray. Font: ITC Franklin Gothic Std Medium Condensed.

3. Masonite backer.

Babendure Design Group
8140 Walnut Hill Ln. #950
Dallas, Texas 75231
214.265.1960
www.babendure.com

University Medical Center of El Paso
El Paso Children's

8th Floor Build Out
Contract Drawings

Date	Issued
06.12.24	For Bid

Design Intent Drawings

©Babendure Design Group. All rights reserved. No part of this document may be reproduced or utilized in any form without prior written authorization from Babendure Design Group. This document serves as a device to communicate design intent only. Fabrication and installation of all products represented herein will be derived from the shop drawings produced by the project's contracted fabricator.

INT.109
Restroom Identity

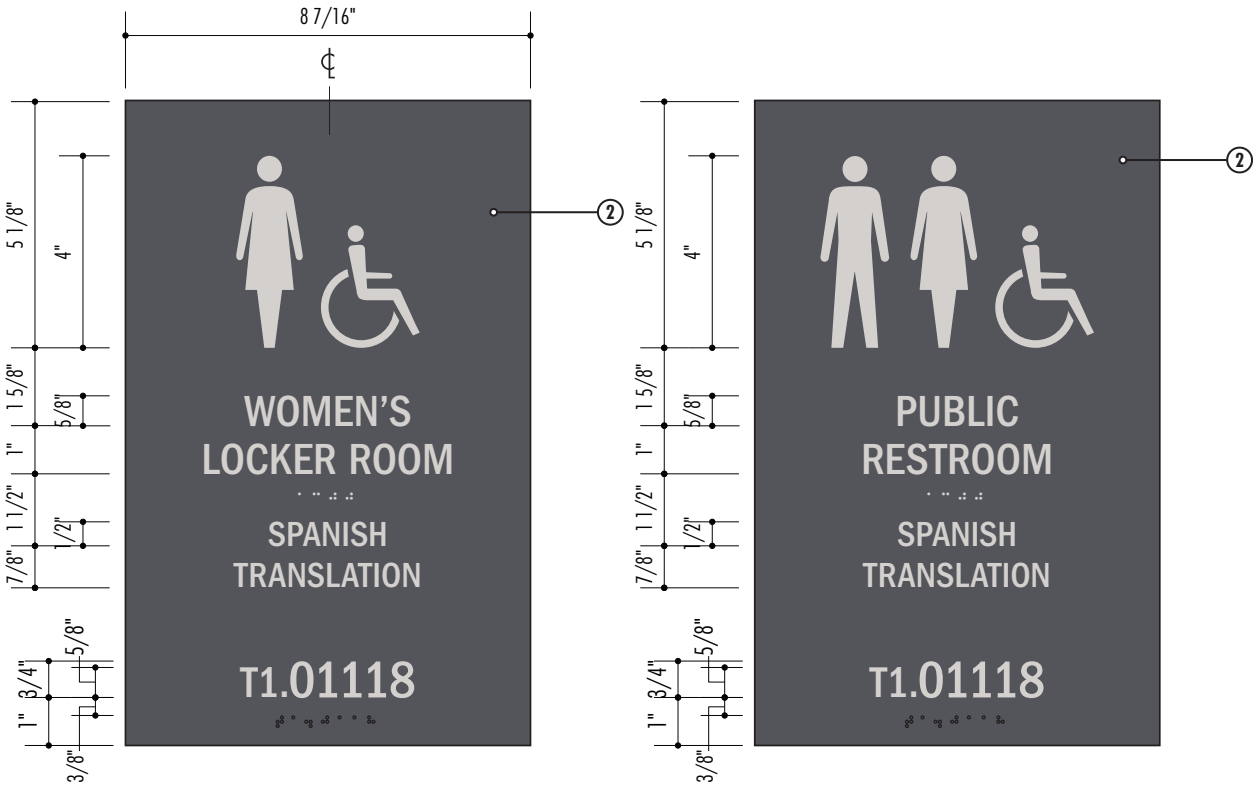

5 **Text Layout - Permanent Message**
Scale: 3"=1'-0"

1. "Premier Plus" aluminum extrusion frame part number "2040 Boxed" with 5/16" inside depth and satin silver finish as provided by The JRS Company. (Or approved equal.)

   Complete assembly to be mounted with low-VOC thin-mil VHB Tape and low-VOC silicone adhesive. Sign to be located at 5'- 0" to center A.F.F. and 3" from strike side of door.

   Provide vinyl backup plate to match V-5 Satin Aluminum for glass-mount conditions.

   The JRS Company
   www.jrscoinc.com

2. 1/16" photopolymer painted to match P-12 Dark Gray and laminated to moisture-resistant filler panel to sit flush with frame. Raised text painted to match P-11 Light Gray. Font: ITC Franklin Gothic Std Medium Condensed.

3. Masonite backer.

Babendure Design Group
8140 Walnut Hill Ln. #950
Dallas, Texas 75231
214.265.1960
www.babendure.com

University Medical Center of El Paso
El Paso Children's

8th Floor Build Out
Contract Drawings

Date	Issued
06.12.24	For Bid

Design Intent Drawings

©Babendure Design Group. All rights reserved. No part of this document may be reproduced or utilized in any form without prior written authorization from Babendure Design Group. This document serves as a device to communicate design intent only. Fabrication and installation of all products represented herein will be derived from the shop drawings produced by the project's contracted fabricator.

INT.109
Restroom Identity

1 **INT.112 - Stair Corridor Identity**
Scale: 3"=1'-0"

2 **Mounting Elevation**
Scale: 3/8"=1'-0"

1. "Premier Plus" aluminum extrusion frame part number "2040 Boxed" with 5/16" inside depth and satin silver finish as provided by The JRS Company. (Or approved equal.)

   Complete assembly to be mounted with low-VOC thin-mil VHB Tape and low-VOC silicone adhesive. Sign to be located at 5'- 0" to center A.F.F. and 3" from strike side of door.

   Provide vinyl backup plate to match V-5 Satin Aluminum for glass-mount conditions.

   The JRS Company
   www.jrscoinc.com

2. 1/16" photopolymer painted to match P-12 Dark Gray and laminated to moisture-resistant filler panel to sit flush with frame. Raised text painted to match P-11 Light Gray.

3. Masonite backer.

4. Font: ITC Franklin Gothic Std Demi Condensed.

5. Font: ITC Franklin Gothic Std Medium Condensed.

Babendure Design Group
8140 Walnut Hill Ln. #950
Dallas, Texas 75231
214.265.1960
www.babendure.com

University Medical Center of El Paso
El Paso Children's

8th Floor Build Out
Contract Drawings

Date	Issued
06.12.24	For Bid

Design Intent Drawings

©Babendure Design Group. All rights reserved. No part of this document may be reproduced or utilized in any form without prior written authorization from Babendure Design Group. This document serves as a device to communicate design intent only. Fabrication and installation of all products represented herein will be derived from the shop drawings produced by the project's contracted fabricator.

INT.112
Stair Corridor Identity

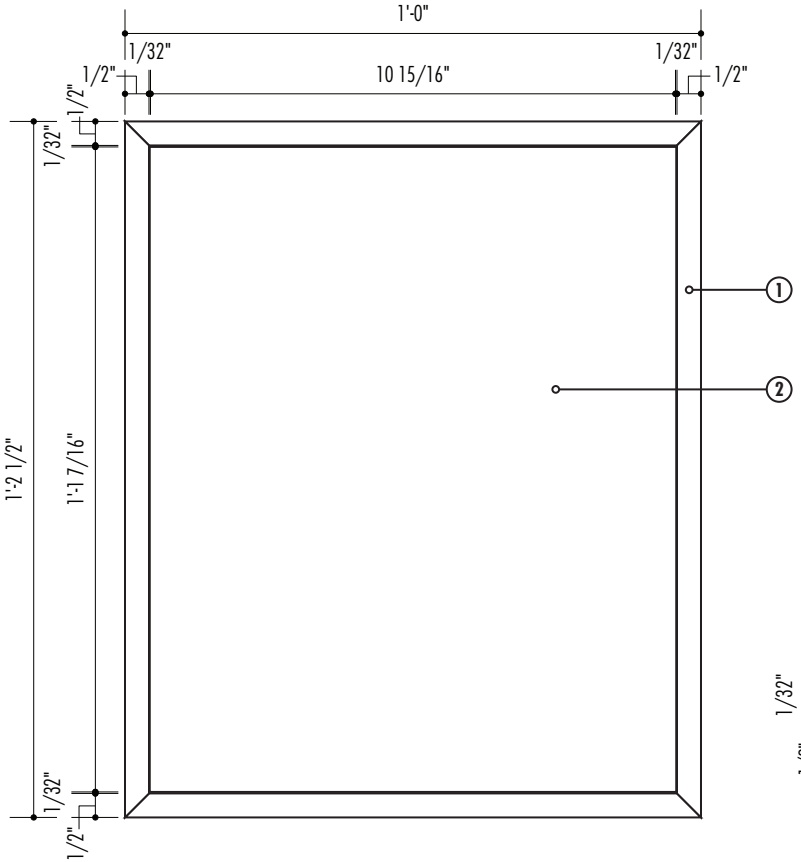

3 **Front Elevation**
Scale: 3"=1'-0"

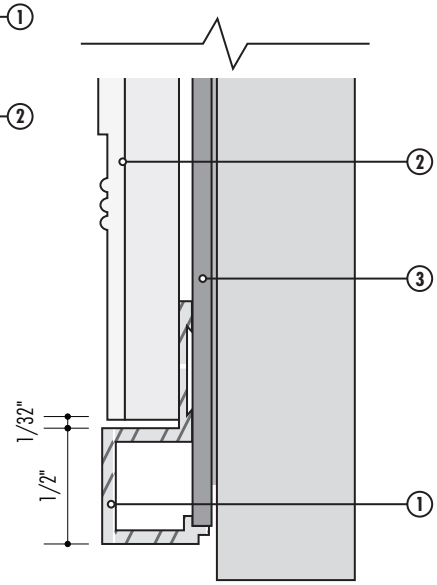

4 **Detail - Frame Section**
Scale: Full Size

1. "Premier Plus" aluminum extrusion frame part number "2040 Boxed" with 5/16" inside depth and satin silver finish as provided by The JRS Company. (Or approved equal.)

   Complete assembly to be mounted with low-VOC thin-mil VHB Tape and low-VOC silicone adhesive. Sign to be located at 5'- 0" to center A.F.F. and 3" from strike side of door.

   Provide vinyl backup plate to match V-5 Satin Aluminum for glass-mount conditions.

   The JRS Company
   www.jrscoinc.com

2. 1/16" photopolymer painted to match P-12 Dark Gray and laminated to moisture-resistant filler panel to sit flush with frame. Raised text painted to match P-11 Light Gray.

3. Masonite backer.

4. Font: ITC Franklin Gothic Std Demi Condensed.

5. Font: ITC Franklin Gothic Std Medium Condensed.

Babendure Design Group
8140 Walnut Hill Ln. #950
Dallas, Texas 75231
214.265.1960
www.babendure.com

University Medical Center of El Paso
El Paso Children's

8th Floor Build Out
Contract Drawings

Date	Issued
06.12.24	For Bid

Design Intent Drawings

©Babendure Design Group. All rights reserved. No part of this document may be reproduced or utilized in any form without prior written authorization from Babendure Design Group. This document serves as a device to communicate design intent only. Fabrication and installation of all products represented herein will be derived from the shop drawings produced by the project's contracted fabricator.

INT.112
Stair Corridor Identity

5 **Text Layout - Permanent Message**
Scale: 3"=1'-0"

1. "Premier Plus" aluminum extrusion frame part number "2040 Boxed" with 5/16" inside depth and satin silver finish as provided by The JRS Company. (Or approved equal.)

   Complete assembly to be mounted with low-VOC thin-mil VHB Tape and low-VOC silicone adhesive. Sign to be located at 5'- 0" to center A.F.F. and 3" from strike side of door.

   Provide vinyl backup plate to match V-5 Satin Aluminum for glass-mount conditions.

   The JRS Company
   www.jrscoinc.com

2. 1/16" photopolymer painted to match P-12 Dark Gray and laminated to moisture-resistant filler panel to sit flush with frame. Raised text painted to match P-11 Light Gray.

3. Masonite backer.

4. Font: ITC Franklin Gothic Std Demi Condensed.

5. Font: ITC Franklin Gothic Std Medium Condensed.

Babendure Design Group
8140 Walnut Hill Ln. #950
Dallas, Texas 75231
214.265.1960
www.babendure.com

University Medical Center of El Paso
El Paso Children's

8th Floor Build Out
Contract Drawings

Date	Issued
06.12.24	For Bid

Design Intent Drawings

©Babendure Design Group. All rights reserved. No part of this document may be reproduced or utilized in any form without prior written authorization from Babendure Design Group. This document serves as a device to communicate design intent only. Fabrication and installation of all products represented herein will be derived from the shop drawings produced by the project's contracted fabricator.

INT.112
Stair Corridor Identity

1 **INT.113 - Stairwell Identity**
Scale: 3"=1'-0"

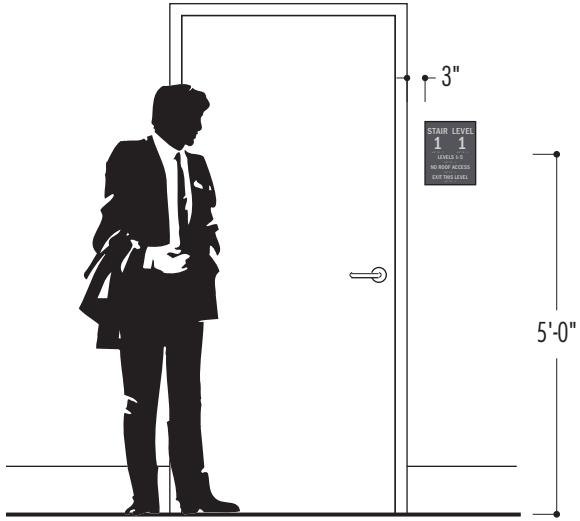

2 **Mounting Elevation**
Scale: 3/8"=1'-0"

1. 1/8" photopolymer painted to match P-12 Dark Gray. Laminated to Masonite backer.

   Complete assembly to be mounted with low-VOC thin-mil VHB Tape and low-VOC silicone adhesive. Sign to be located at 5'- 0" to center A.F.F.

2. 1/8" Masonite backer inset 1/8" from all edges of sign face.

3. Raised text and symbol painted to match P-11 Light Gray. Font: ITC Franklin Gothic Std Medium Condensed.

Babendure Design Group
8140 Walnut Hill Ln. #950
Dallas, Texas 75231
214.265.1960
www.babendure.com

University Medical Center of El Paso
El Paso Children's

8th Floor Build Out
Contract Drawings

Date	Issued
06.12.24	For Bid

Design Intent Drawings

©Babendure Design Group. All rights reserved. No part of this document may be reproduced or utilized in any form without prior written authorization from Babendure Design Group. This document serves as a device to communicate design intent only. Fabrication and installation of all products represented herein will be derived from the shop drawings produced by the project's contracted fabricator.

INT.113
Stairwell Identity

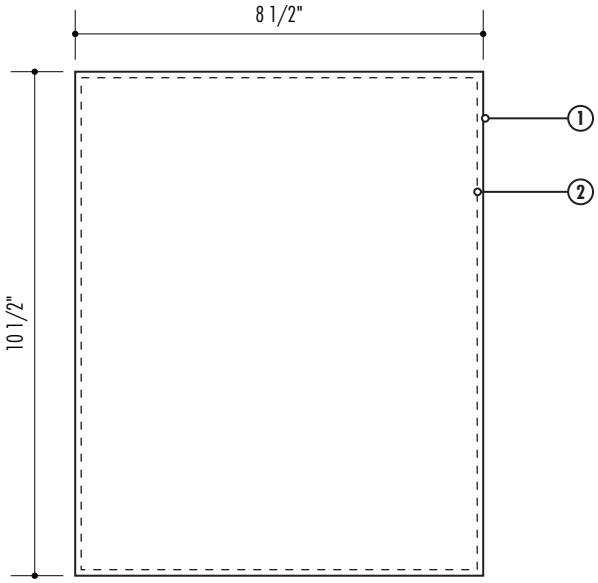

3 **Front Elevation**
Scale: 3"=1'-0"

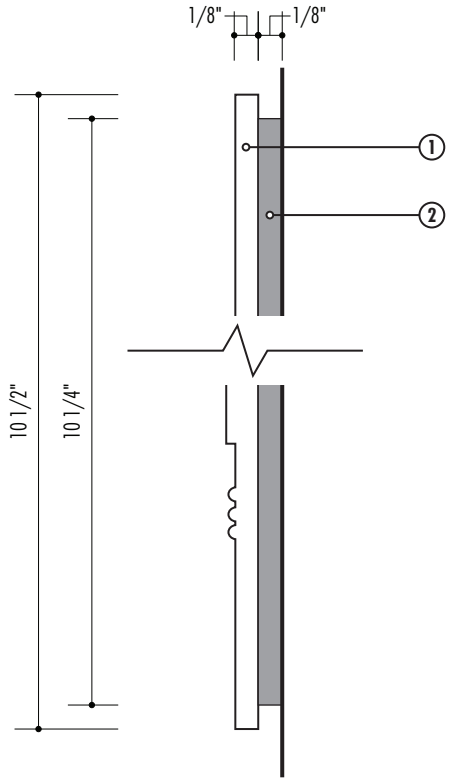

4 **Side Elevation**
Scale: Full Size

1. 1/8" photopolymer painted to match P-12 Dark Gray. Laminated to Masonite backer.

   Complete assembly to be mounted with low-VOC thin-mil VHB Tape and low-VOC silicone adhesive. Sign to be located at 5'- 0" to center A.F.F.

2. 1/8" Masonite backer inset 1/8" from all edges of sign face.

3. Raised text and symbol painted to match P-11 Light Gray. Font: ITC Franklin Gothic Std Medium Condensed.

Babendure Design Group
8140 Walnut Hill Ln. #950
Dallas, Texas 75231
214.265.1960
www.babendure.com

University Medical Center of El Paso
El Paso Children's

8th Floor Build Out
Contract Drawings

Date	Issued
06.12.24	For Bid

Design Intent Drawings

©Babendure Design Group. All rights reserved. No part of this document may be reproduced or utilized in any form without prior written authorization from Babendure Design Group. This document serves as a device to communicate design intent only. Fabrication and installation of all products represented herein will be derived from the shop drawings produced by the project's contracted fabricator.

INT.113
Stairwell Identity

1. 1/8” photopolymer painted to match P-12 Dark Gray. Laminated to Masonite backer.

   Complete assembly to be mounted with low-VOC thin-mil VHB Tape and low-VOC silicone adhesive. Sign to be located at 5’- 0” to center A.F.F.

2. 1/8” Masonite backer inset 1/8” from all edges of sign face.

3. Raised text and symbol painted to match P-11 Light Gray. Font: ITC Franklin Gothic Std Medium Condensed.

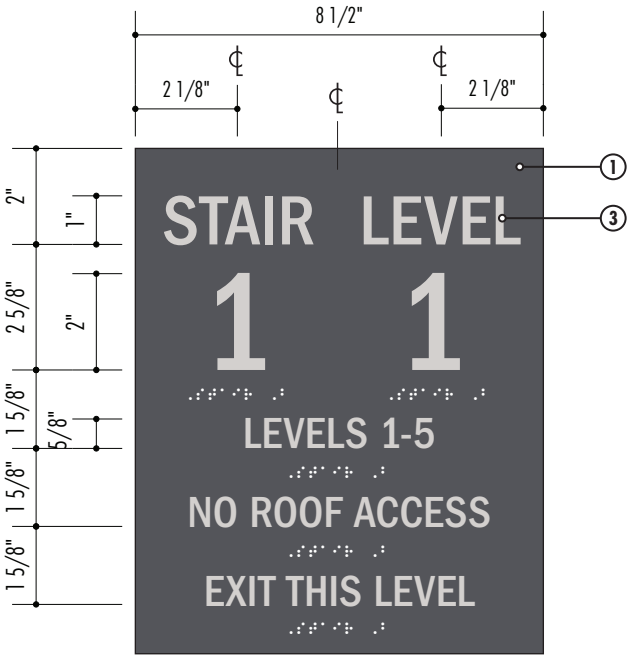

5 Text Layout
Scale: 3"=1'-0"

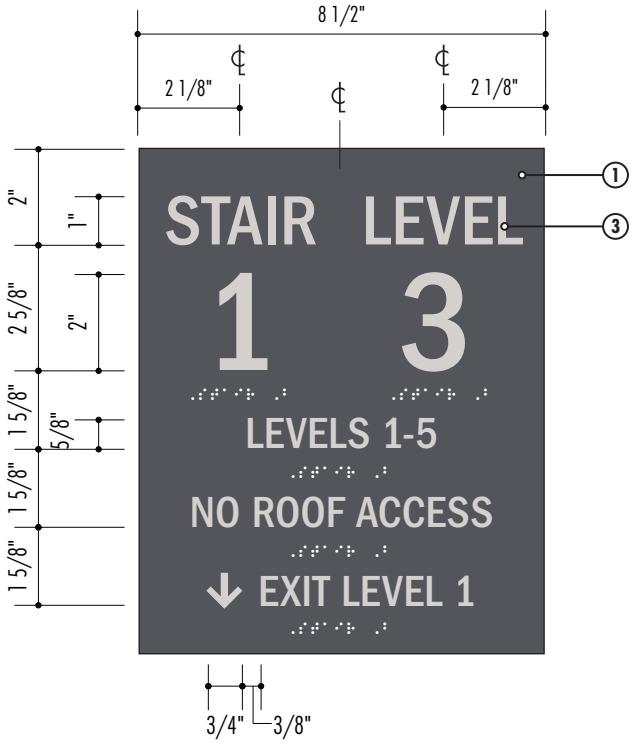

6 Alternate Text Layout
Scale: 3"=1'-0"

Babendure Design Group
8140 Walnut Hill Ln. #950
Dallas, Texas 75231
214.265.1960
www.babendure.com

University Medical Center of El Paso
El Paso Children’s

8th Floor Build Out
Contract Drawings

Date	Issued
06.12.24	For Bid

Design Intent Drawings

©Babendure Design Group. All rights reserved. No part of this document may be reproduced or utilized in any form without prior written authorization from Babendure Design Group. This document serves as a device to communicate design intent only. Fabrication and installation of all products represented herein will be derived from the shop drawings produced by the project’s contracted fabricator.

INT.113
Stairwell Identity

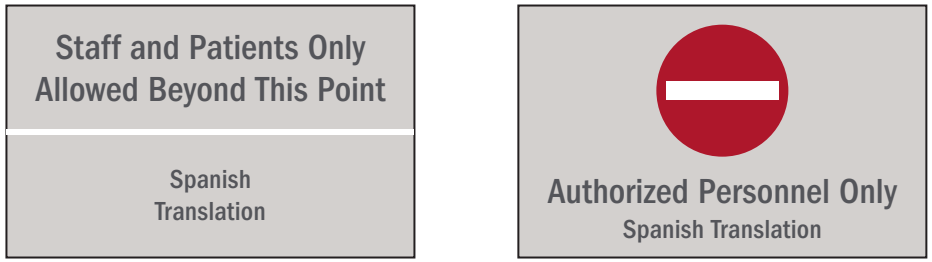

1 INT.114.1 - Notice Posting, Small

Scale: 3"=1'-0"

1. 1/8" non-glare clear acrylic with flame-polished edges and second-surface screen printed graphic. Laminated to Masonite backer.

   Complete assembly to be mounted with low-VOC thin-mil VHB Tape and low-VOC silicone adhesive. Sign to be located at 5'- 0" to center A.F.F.

2. 1/8" Masonite backer inset 1/8" from all edges of sign face.

3. Second-surface screen printed field to match P-11 Light Gray with decorative rule lines to match P-3 White and text to match P-12 Dark Gray. Back-sprayed to match P-3 White. Font: ITC Franklin Gothic Std Medium Condensed.

4. "Do Not Enter" symbol field to match P-5 Red with bar to match P-3 White.

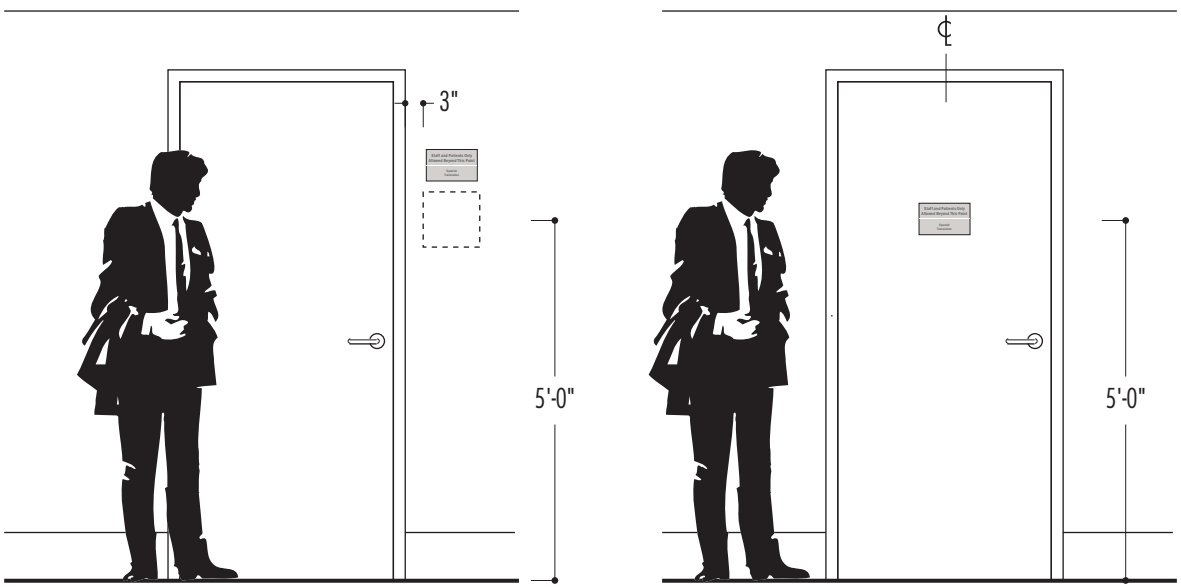

2 Mounting Elevation

Scale: 3/8"=1'-0"

Babendure Design Group
8140 Walnut Hill Ln. #950
Dallas, Texas 75231
214.265.1960
www.babendure.com

University Medical Center of El Paso
El Paso Children's

8th Floor Build Out
Contract Drawings

Date	Issued
06.12.24	For Bid

Design Intent Drawings

©Babendure Design Group. All rights reserved. No part of this document may be reproduced or utilized in any form without prior written authorization from Babendure Design Group. This document serves as a device to communicate design intent only. Fabrication and installation of all products represented herein will be derived from the shop drawings produced by the project's contracted fabricator.

INT.114.1
Notice Posting, Small

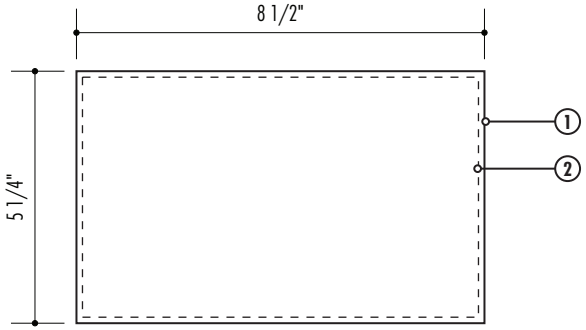

3 **Front Elevation**
Scale: 3"=1'-0"

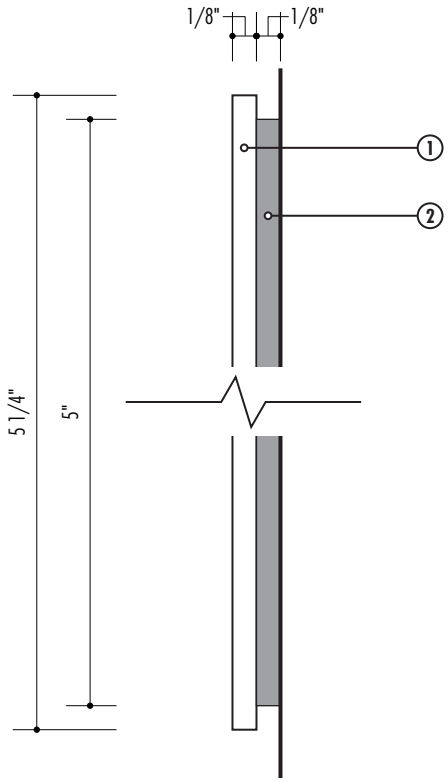

4 **Side Elevation**
Scale: Full Size

1. 1/8" non-glare clear acrylic with flame-polished edges and second-surface screen printed graphic. Laminated to Masonite backer.

   Complete assembly to be mounted with low-VOC thin-mil VHB Tape and low-VOC silicone adhesive. Sign to be located at 5'- 0" to center A.F.F.

2. 1/8" Masonite backer inset 1/8" from all edges of sign face.

3. Second-surface screen printed field to match P-11 Light Gray with decorative rule lines to match P-3 White and text to match P-12 Dark Gray. Back-sprayed to match P-3 White. Font: ITC Franklin Gothic Std Medium Condensed.

4. "Do Not Enter" symbol field to match P-5 Red with bar to match P-3 White.

Babendure Design Group
8140 Walnut Hill Ln. #950
Dallas, Texas 75231
214.265.1960
www.babendure.com

University Medical Center of El Paso
El Paso Children's

8th Floor Build Out
Contract Drawings

Date	Issued
06.12.24	For Bid

Design Intent Drawings

©Babendure Design Group. All rights reserved. No part of this document may be reproduced or utilized in any form without prior written authorization from Babendure Design Group. This document serves as a device to communicate design intent only. Fabrication and installation of all products represented herein will be derived from the shop drawings produced by the project's contracted fabricator.

INT.114.1
Notice Posting, Small

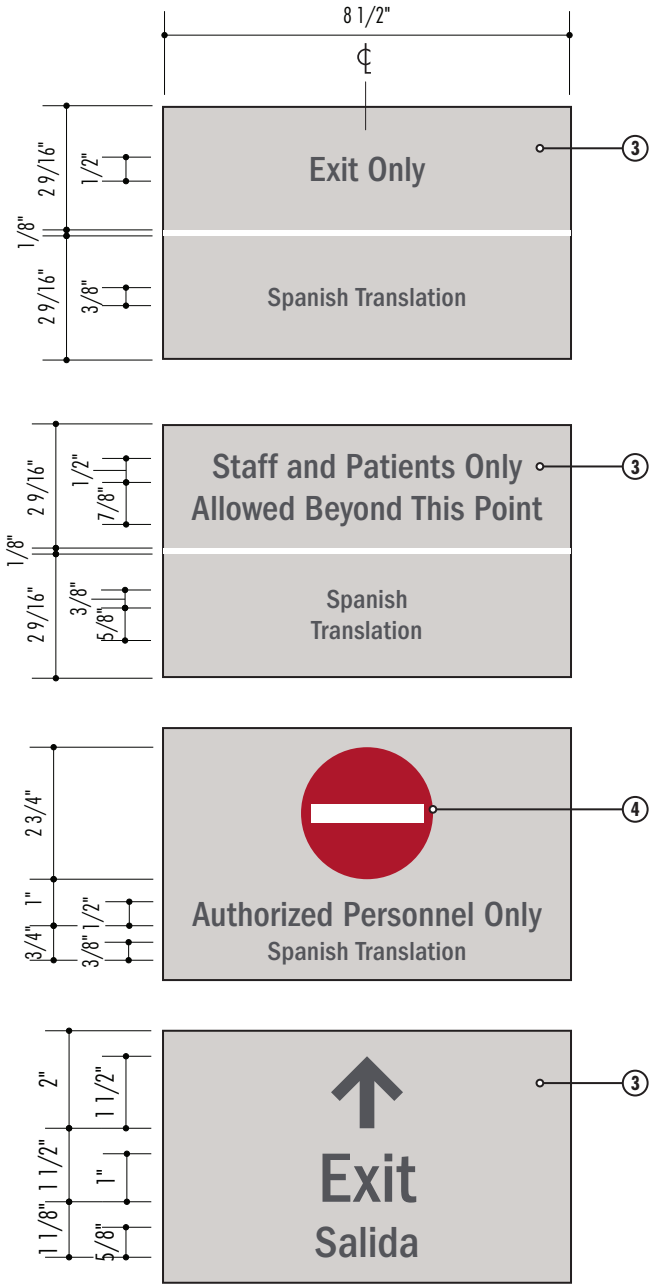

5 **Text Layout - Changeable Message**
Scale: 3"=1'-0"

1. 1/8" non-glare clear acrylic with flame-polished edges and second-surface screen printed graphic. Laminated to Masonite backer.

   Complete assembly to be mounted with low-VOC thin-mil VHB Tape and low-VOC silicone adhesive. Sign to be located at 5'- 0" to center A.F.F.

2. 1/8" Masonite backer inset 1/8" from all edges of sign face.

3. Second-surface screen printed field to match P-11 Light Gray with decorative rule lines to match P-3 White and text to match P-12 Dark Gray. Back-sprayed to match P-3 White. Font: ITC Franklin Gothic Std Medium Condensed.

4. "Do Not Enter" symbol field to match P-5 Red with bar to match P-3 White.

Babendure Design Group
8140 Walnut Hill Ln. #950
Dallas, Texas 75231
214.265.1960
www.babendure.com

University Medical Center of El Paso
El Paso Children's

8th Floor Build Out
Contract Drawings

Date	Issued
06.12.24	For Bid

Design Intent Drawings

©Babendure Design Group. All rights reserved. No part of this document may be reproduced or utilized in any form without prior written authorization from Babendure Design Group. This document serves as a device to communicate design intent only. Fabrication and installation of all products represented herein will be derived from the shop drawings produced by the project's contracted fabricator.

INT.114.1
Notice Posting, Small

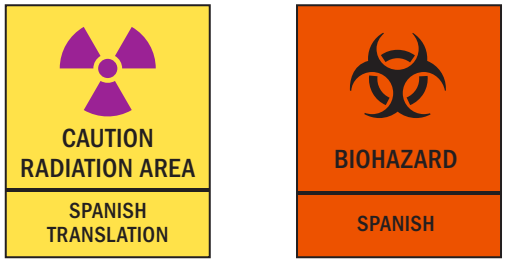

1 **INT.114.2 - Notice Posting, Medium**
Scale: 3"=1'-0"

2 **Alternate Text Layouts**
Scale: 1 1/2"=1'-0"

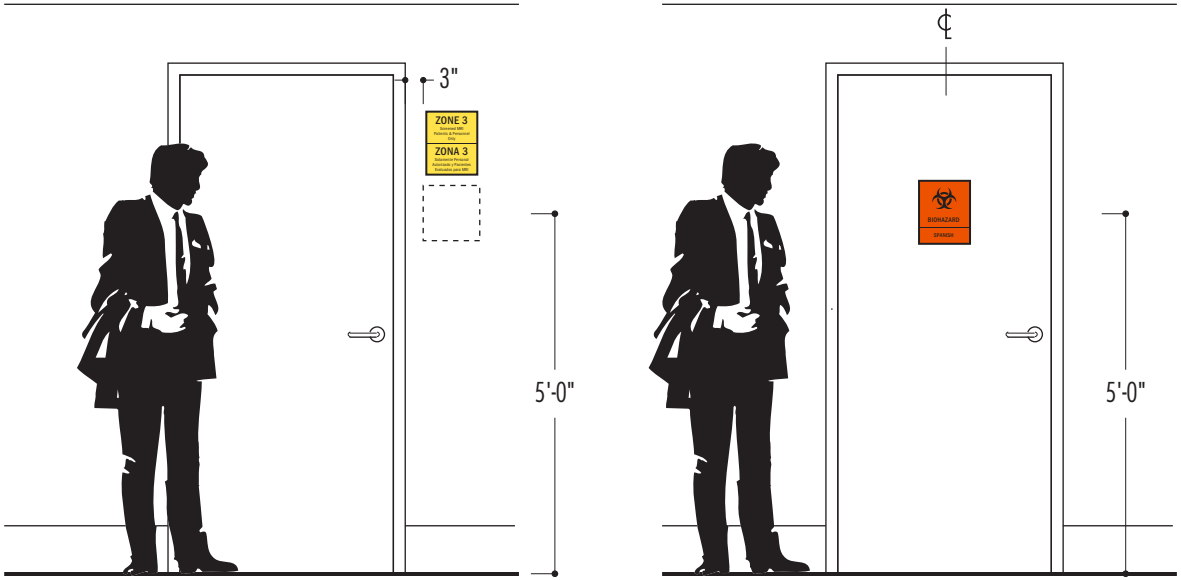

3 **Mounting Elevation**
Scale: 3/8"=1'-0"

1. 1/8" non-glare clear acrylic with flame-polished edges and second-surface screen printed graphic. Laminated to Masonite backer.

   Complete assembly to be mounted with low-VOC thin-mil VHB Tape and low-VOC silicone adhesive. Sign to be located at 5'-0" to center A.F.F.

2. 1/8" Masonite backer inset 1/8" from all edges of sign face.

3. Second-surface screen printed field to match P-3 White with decorative rule lines to match P-4 Black and text to match P-9 Green. Back-sprayed to match P-3 White.

4. Font: ITC Franklin Gothic Std Medium Condensed.

5. Font: ITC Franklin Gothic Std Book Condensed.

6. Second-surface screen printed field to match P-8 Blue with decorative rule lines to match P-4 Black and text to match P-3 White. Back-sprayed to match P-3 White.

7. Second-surface screen printed field to match P-6 Yellow with decorative rule lines to match P-4 Black and text to match P-4 Black. Back-sprayed to match P-3 White.

8. Second-surface screen printed field to match P-3 White with decorative rule lines to match P-4 Black and text to match P-5 Red. Back-sprayed to match P-3 White.

9. Second-surface screen printed field to match P-6 Yellow with decorative rule lines to match P-4 Black, text to match P-4 Black, and symbol to match P-10 Purple. Back-sprayed to match P-3 White.

10. Second-surface screen printed field to match P-7 Orange with decorative rule lines to match P-4 Black and text and symbol to match P-4 Black. Back-sprayed to match P-3 White.

11. Second-surface screen printed field to match P-11 Light Gray with decorative rule lines to match P-3 White and text to match P-12 Dark Gray. Back-sprayed to match P-3 White.

12. "Do Not Enter" symbol field to match P-5 Red with bar to match P-3 White.

Babendure Design Group
8140 Walnut Hill Ln. #950
Dallas, Texas 75231
214.265.1960
www.babendure.com

University Medical Center of El Paso
El Paso Children's

8th Floor Build Out
Contract Drawings

Date	Issued
06.12.24	For Bid

Design Intent Drawings

©Babendure Design Group. All rights reserved. No part of this document may be reproduced or utilized in any form without prior written authorization from Babendure Design Group. This document serves as a device to communicate design intent only. Fabrication and installation of all products represented herein will be derived from the shop drawings produced by the project's contracted fabricator.

INT.114.2
Notice Posting, Medium

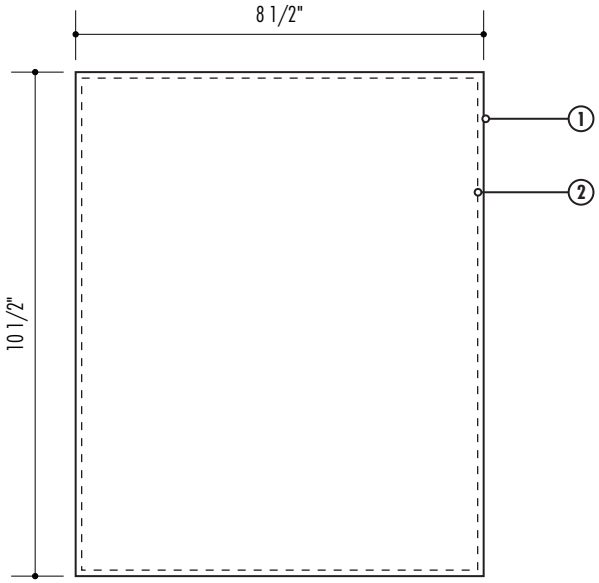

4 **Front Elevation**
Scale: 3"=1'-0"

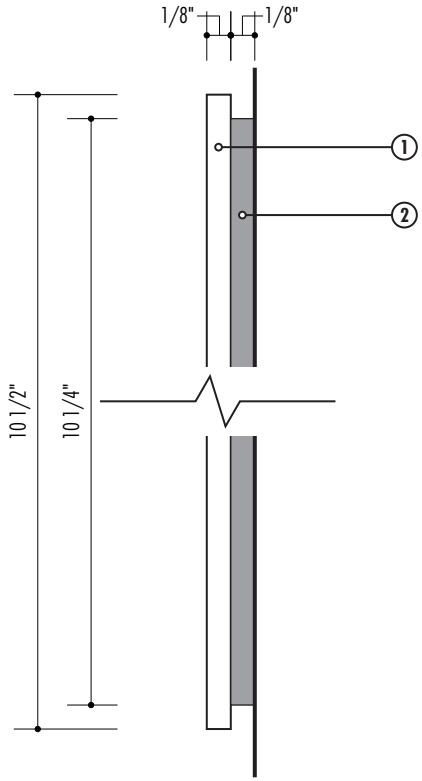

5 **Side Elevation**
Scale: Full Size

1. 1/8" non-glare clear acrylic with flame-polished edges and second-surface screen printed graphic. Laminated to Masonite backer.

   Complete assembly to be mounted with low-VOC thin-mil VHB Tape and low-VOC silicone adhesive. Sign to be located at 5'-0" to center A.F.F.

2. 1/8" Masonite backer inset 1/8" from all edges of sign face.

3. Second-surface screen printed field to match P-3 White with decorative rule lines to match P-4 Black and text to match P-9 Green. Back-sprayed to match P-3 White.

4. Font: ITC Franklin Gothic Std Medium Condensed.

5. Font: ITC Franklin Gothic Std Book Condensed.

6. Second-surface screen printed field to match P-8 Blue with decorative rule lines to match P-4 Black and text to match P-3 White. Back-sprayed to match P-3 White.

7. Second-surface screen printed field to match P-6 Yellow with decorative rule lines to match P-4 Black and text to match P-4 Black. Back-sprayed to match P-3 White.

8. Second-surface screen printed field to match P-3 White with decorative rule lines to match P-4 Black and text to match P-5 Red. Back-sprayed to match P-3 White.

9. Second-surface screen printed field to match P-6 Yellow with decorative rule lines to match P-4 Black, text to match P-4 Black, and symbol to match P-10 Purple. Back-sprayed to match P-3 White.

10. Second-surface screen printed field to match P-7 Orange with decorative rule lines to match P-4 Black and text and symbol to match P-4 Black. Back-sprayed to match P-3 White.

11. Second-surface screen printed field to match P-11 Light Gray with decorative rule lines to match P-3 White and text to match P-12 Dark Gray. Back-sprayed to match P-3 White.

12. "Do Not Enter" symbol field to match P-5 Red with bar to match P-3 White.

Babendure Design Group
8140 Walnut Hill Ln. #950
Dallas, Texas 75231
214.265.1960
www.babendure.com

University Medical Center of El Paso
El Paso Children's

8th Floor Build Out
Contract Drawings

Date	Issued
06.12.24	For Bid

Design Intent Drawings

©Babendure Design Group. All rights reserved. No part of this document may be reproduced or utilized in any form without prior written authorization from Babendure Design Group. This document serves as a device to communicate design intent only. Fabrication and installation of all products represented herein will be derived from the shop drawings produced by the project's contracted fabricator.

INT.114.2
Notice Posting, Medium

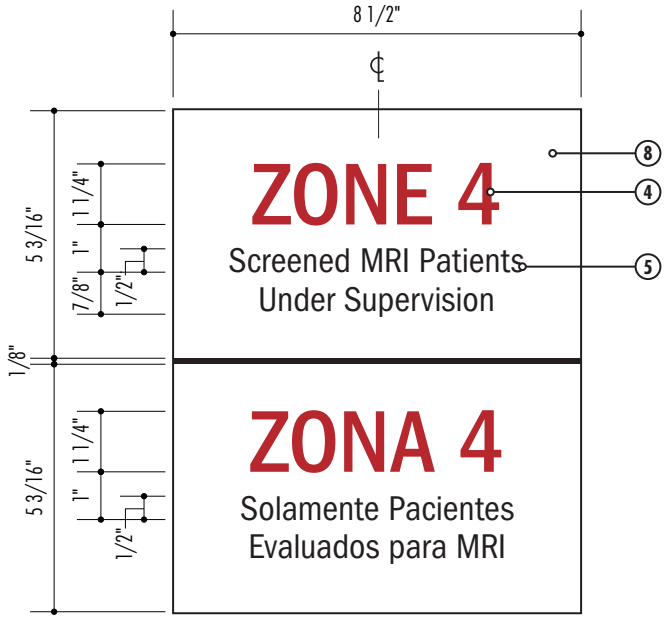

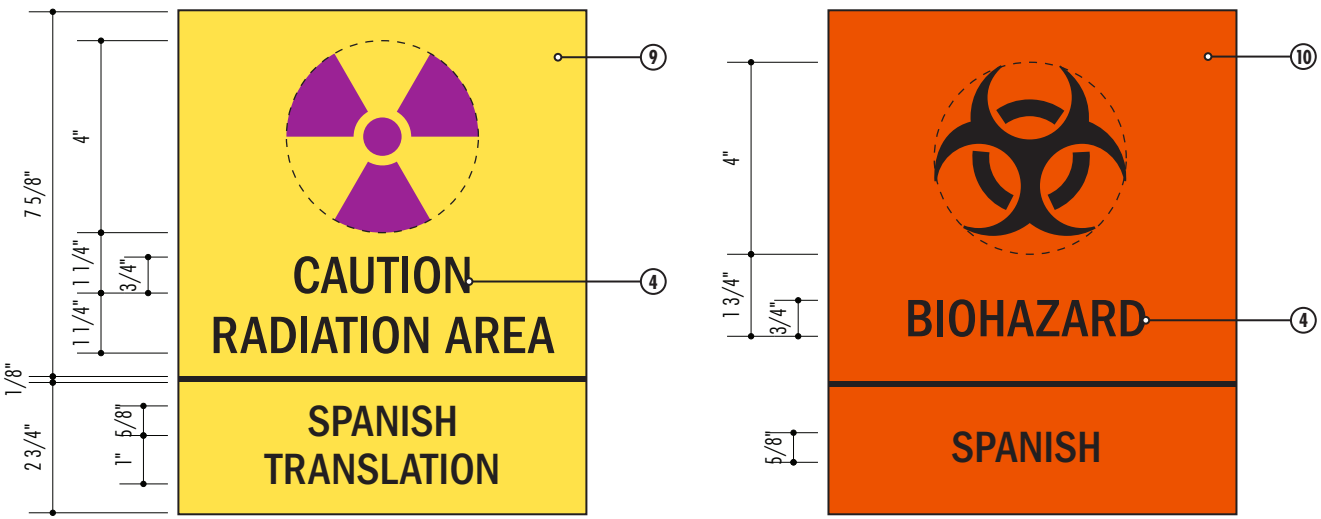

7 **Text Layout - Changeable Message**
Scale: 3"=1'-0"

1. 1/8" non-glare clear acrylic with flame-polished edges and second-surface screen printed graphic. Laminated to Masonite backer.

   Complete assembly to be mounted with low-VOC thin-mil VHB Tape and low-VOC silicone adhesive. Sign to be located at 5'-0" to center A.F.F.

2. 1/8" Masonite backer inset 1/8" from all edges of sign face.

3. Second-surface screen printed field to match P-3 White with decorative rule lines to match P-4 Black and text to match P-9 Green. Back-sprayed to match P-3 White.

4. Font: ITC Franklin Gothic Std Medium Condensed.

5. Font: ITC Franklin Gothic Std Book Condensed.

6. Second-surface screen printed field to match P-8 Blue with decorative rule lines to match P-4 Black and text to match P-3 White. Back-sprayed to match P-3 White.

7. Second-surface screen printed field to match P-6 Yellow with decorative rule lines to match P-4 Black and text to match P-4 Black. Back-sprayed to match P-3 White.

8. Second-surface screen printed field to match P-3 White with decorative rule lines to match P-4 Black and text to match P-5 Red. Back-sprayed to match P-3 White.

9. Second-surface screen printed field to match P-6 Yellow with decorative rule lines to match P-4 Black, text to match P-4 Black, and symbol to match P-10 Purple. Back-sprayed to match P-3 White.

10. Second-surface screen printed field to match P-7 Orange with decorative rule lines to match P-4 Black and text and symbol to match P-4 Black. Back-sprayed to match P-3 White.

11. Second-surface screen printed field to match P-11 Light Gray with decorative rule lines to match P-3 White and text to match P-12 Dark Gray. Back-sprayed to match P-3 White.

12. "Do Not Enter" symbol field to match P-5 Red with bar to match P-3 White.

Babendure Design Group
8140 Walnut Hill Ln. #950
Dallas, Texas 75231
214.265.1960
www.babendure.com

University Medical Center of El Paso
El Paso Children's

8th Floor Build Out
Contract Drawings

Date	Issued
06.12.24	For Bid

Design Intent Drawings

©Babendure Design Group. All rights reserved. No part of this document may be reproduced or utilized in any form without prior written authorization from Babendure Design Group. This document serves as a device to communicate design intent only. Fabrication and installation of all products represented herein will be derived from the shop drawings produced by the project's contracted fabricator.

INT.114.2
Notice Posting, Medium

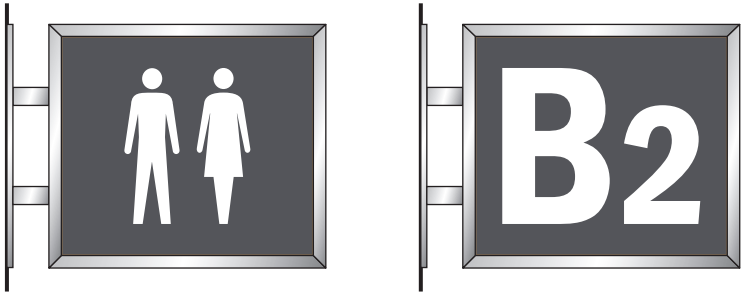

1 **INT.115.1 - Flag Identity, Small, Wall-Mounted**

Scale: 1 1/2"=1'-0"

2 **Mounting Elevation**

Scale: 3/8"=1'-0"

1. 1" x 1/2" aluminum frame painted to match P-33 Frame Silver.
2. 1/4" aluminum corner gusset.
3. 1/16" acrylic message panel painted to match P-12 Dark Gray. Provide necessary internal supports to keep panel from buckling or warping.
4. 1/4" acrylic build-up to hold message panel flush to frame.
5. 3/4" x 3/4" aluminum bar stock welded to aluminum mounting plate and painted to match P-33 Frame Silver. Mechanically fastened to aluminum frame with machine screw and tapped hole.
6. 1/4" aluminum mounting plate painted to match P-33 Frame Silver.

   Complete assembly to be mounted to existing wall with countersunk screws. Provide blocking where necessary. Sign to be located at 7'- 0" to the bottom A.F.F.
7. Applied vinyl text and symbols to match V-2 White. Font: ITC Franklin Gothic Std Demi Condensed.

Babendure Design Group
8140 Walnut Hill Ln. #950
Dallas, Texas 75231
214.265.1960
www.babendure.com

University Medical Center of El Paso
El Paso Children's

8th Floor Build Out
Contract Drawings

Date	Issued
06.12.24	For Bid

Design Intent Drawings

©Babendure Design Group. All rights reserved. No part of this document may be reproduced or utilized in any form without prior written authorization from Babendure Design Group. This document serves as a device to communicate design intent only. Fabrication and installation of all products represented herein will be derived from the shop drawings produced by the project's contracted fabricator.

INT.115.1
Flag Identity, Small, Wall Mounted

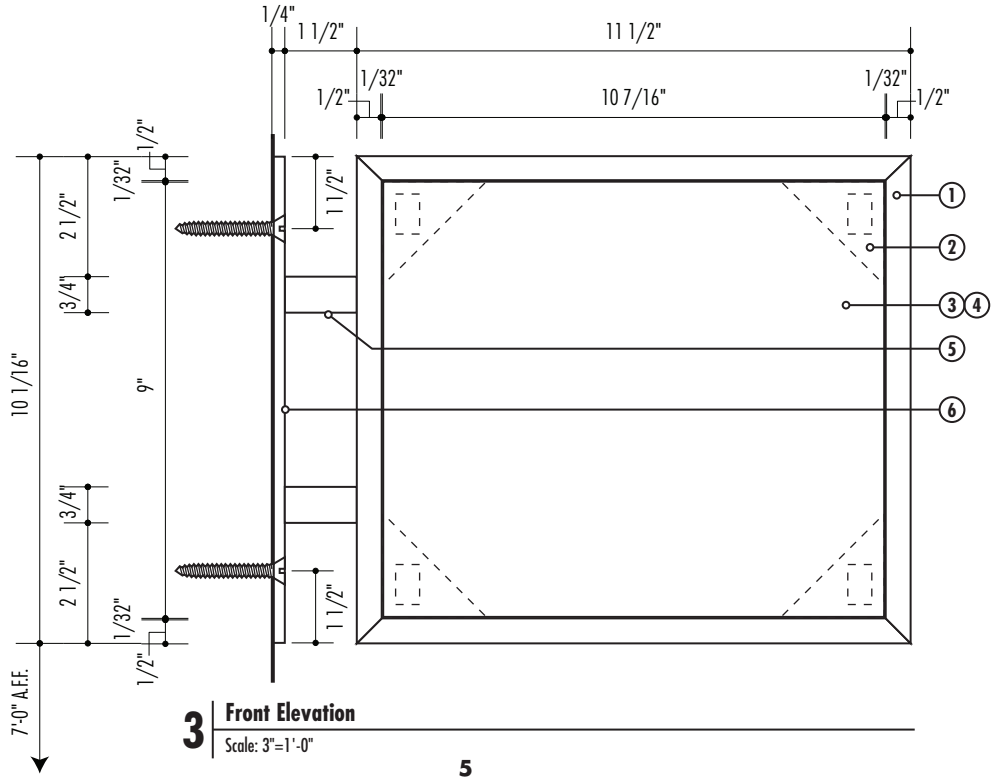

3 **Front Elevation**
Scale: 3"=1'-0"

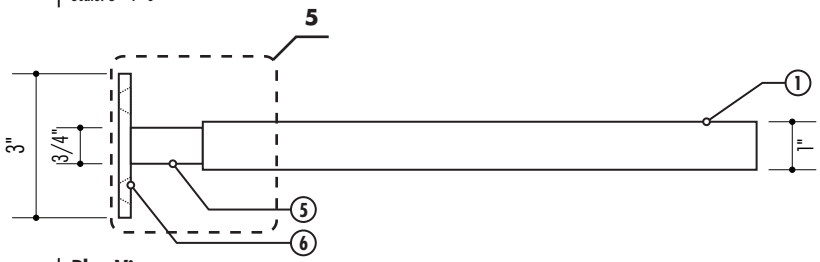

4 **Plan View**
Scale: 3"=1'-0"

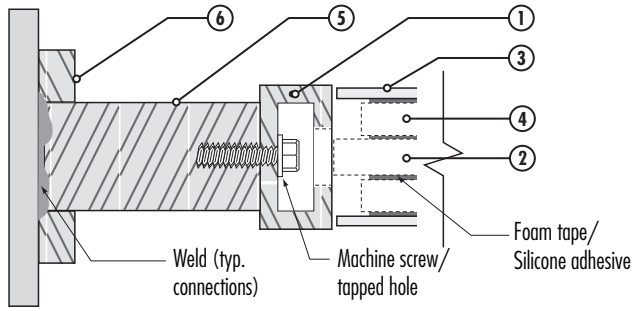

5 **Section Detail**
Scale: Not To Size

1. 1" x 1/2" aluminum frame painted to match P-33 Frame Silver.
2. 1/4" aluminum corner gusset.
3. 1/16" acrylic message panel painted to match P-12 Dark Gray. Provide necessary internal supports to keep panel from buckling or warping.
4. 1/4" acrylic build-up to hold message panel flush to frame.
5. 3/4" x 3/4" aluminum bar stock welded to aluminum mounting plate and painted to match P-33 Frame Silver. Mechanically fastened to aluminum frame with machine screw and tapped hole.
6. 1/4" aluminum mounting plate painted to match P-33 Frame Silver.

   Complete assembly to be mounted to existing wall with countersunk screws. Provide blocking where necessary. Sign to be located at 7'- 0" to the bottom A.F.F.
7. Applied vinyl text and symbols to match V-2 White. Font: ITC Franklin Gothic Std Demi Condensed.

Babendure Design Group
8140 Walnut Hill Ln. #950
Dallas, Texas 75231
214.265.1960
www.babendure.com

University Medical Center of El Paso
El Paso Children's

8th Floor Build Out
Contract Drawings

Date	Issued
06.12.24	For Bid

Design Intent Drawings

©Babendure Design Group. All rights reserved. No part of this document may be reproduced or utilized in any form without prior written authorization from Babendure Design Group. This document serves as a device to communicate design intent only. Fabrication and installation of all products represented herein will be derived from the shop drawings produced by the project's contracted fabricator.

INT.115.1
Flag Identity, Small, Wall Mounted

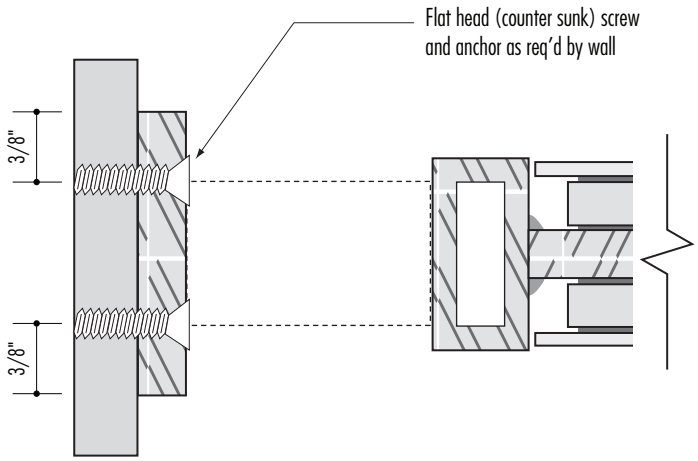

6 **Mounting Detail**
Scale: Full Size

1. 1" x 1/2" aluminum frame painted to match P-33 Frame Silver.

2. 1/4" aluminum corner gusset.

3. 1/16" acrylic message panel painted to match P-12 Dark Gray. Provide necessary internal supports to keep panel from buckling or warping.

4. 1/4" acrylic build-up to hold message panel flush to frame.

5. 3/4" x 3/4" aluminum bar stock welded to aluminum mounting plate and painted to match P-33 Frame Silver. Mechanically fastened to aluminum frame with machine screw and tapped hole.

6. 1/4" aluminum mounting plate painted to match P-33 Frame Silver.

   Complete assembly to be mounted to existing wall with countersunk screws. Provide blocking where necessary. Sign to be located at 7'- 0" to the bottom A.F.F.

7. Applied vinyl text and symbols to match V-2 White. Font: ITC Franklin Gothic Std Demi Condensed.

Babendure Design Group
8140 Walnut Hill Ln. #950
Dallas, Texas 75231
214.265.1960
www.babendure.com

University Medical Center of El Paso
El Paso Children's

8th Floor Build Out
Contract Drawings

Date	Issued
06.12.24	For Bid

Design Intent Drawings

©Babendure Design Group. All rights reserved. No part of this document may be reproduced or utilized in any form without prior written authorization from Babendure Design Group. This document serves as a device to communicate design intent only. Fabrication and installation of all products represented herein will be derived from the shop drawings produced by the project's contracted fabricator.

INT.115.1
Flag Identity, Small, Wall Mounted

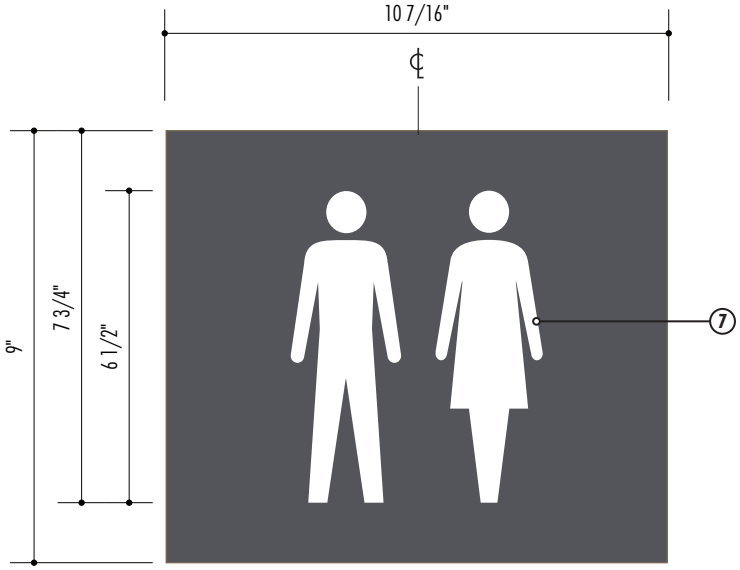

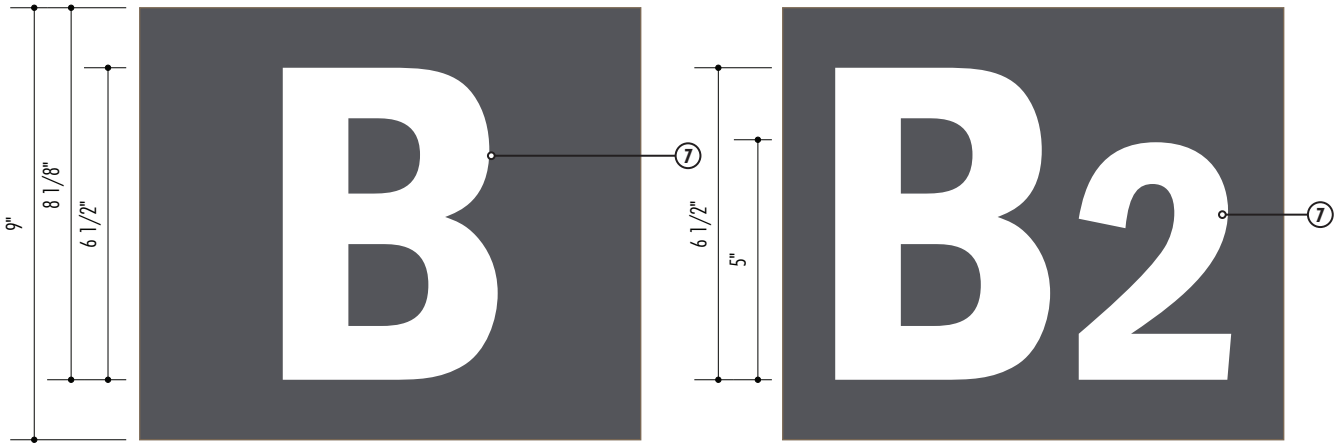

7 **Text Layout**
Scale: 3"=1'-0"

1. 1" x 1/2" aluminum frame painted to match P-33 Frame Silver.
2. 1/4" aluminum corner gusset.
3. 1/16" acrylic message panel painted to match P-12 Dark Gray. Provide necessary internal supports to keep panel from buckling or warping.
4. 1/4" acrylic build-up to hold message panel flush to frame.
5. 3/4" x 3/4" aluminum bar stock welded to aluminum mounting plate and painted to match P-33 Frame Silver. Mechanically fastened to aluminum frame with machine screw and tapped hole.
6. 1/4" aluminum mounting plate painted to match P-33 Frame Silver.

   Complete assembly to be mounted to existing wall with countersunk screws. Provide blocking where necessary. Sign to be located at 7'- 0" to the bottom A.F.F.
7. Applied vinyl text and symbols to match V-2 White. Font: ITC Franklin Gothic Std Demi Condensed.

Babendure Design Group
8140 Walnut Hill Ln. #950
Dallas, Texas 75231
214.265.1960
www.babendure.com

University Medical Center of El Paso
El Paso Children's

8th Floor Build Out
Contract Drawings

Date	Issued
06.12.24	For Bid

Design Intent Drawings

©Babendure Design Group. All rights reserved. No part of this document may be reproduced or utilized in any form without prior written authorization from Babendure Design Group. This document serves as a device to communicate design intent only. Fabrication and installation of all products represented herein will be derived from the shop drawings produced by the project's contracted fabricator.

INT.115.1
Flag Identity, Small, Wall Mounted

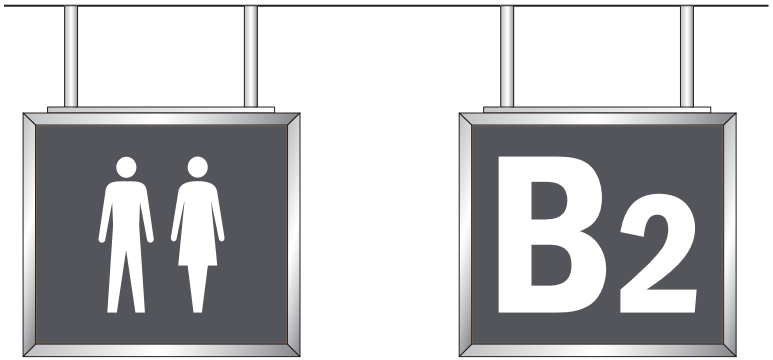

1 **INT.115.2 - Flag Identity, Small, Hanging**

Scale: 1 1/2"=1'-0"

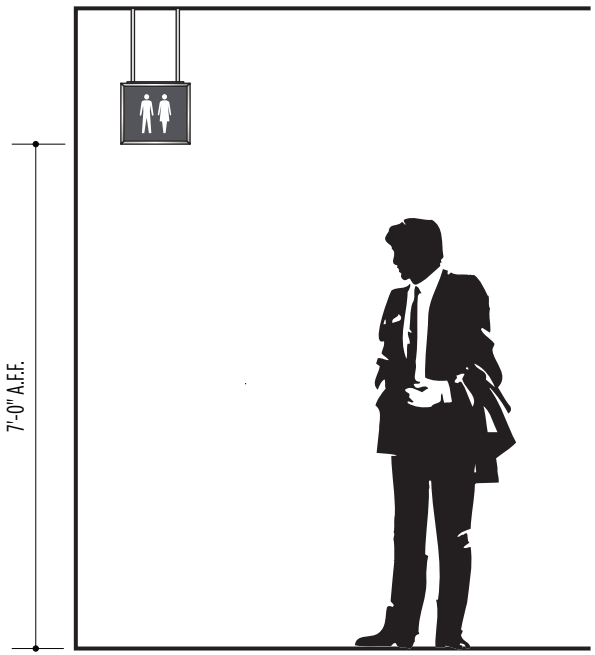

2 **Mounting Elevation**

Scale: 3/8"=1'-0"

1. 1/4" diameter schedule 40 pipe (.54" O.D.) painted to match P-33 Frame Silver, threaded on one end.
2. 1/4" aluminum top plate painted to match P-33 Frame Silver with routed center section to conceal weld.
3. 1" x 1/2" aluminum frame painted to match P-33 Frame Silver.

   Sign to be located at 7'- 0" to the bottom A.F.F.
4. 1/4" aluminum corner gusset.
5. 1/16" acrylic message panel painted to match P-12 Dark Gray. Provide necessary internal supports to keep panel from buckling or warping.
6. 1/4" acrylic build-up to hold digital print flush to frame.
7. Aluminum mounting angle above ceiling.
8. Applied vinyl text and symbols to match V-2 White. Font: ITC Franklin Gothic Std Demi Condensed.

Babendure Design Group
8140 Walnut Hill Ln. #950
Dallas, Texas 75231
214.265.1960
www.babendure.com

University Medical Center of El Paso
El Paso Children's

8th Floor Build Out
Contract Drawings

Date	Issued
06.12.24	For Bid

Design Intent Drawings

©Babendure Design Group. All rights reserved. No part of this document may be reproduced or utilized in any form without prior written authorization from Babendure Design Group. This document serves as a device to communicate design intent only. Fabrication and installation of all products represented herein will be derived from the shop drawings produced by the project's contracted fabricator.

INT.115.2
Flag Identity, Small, Hanging

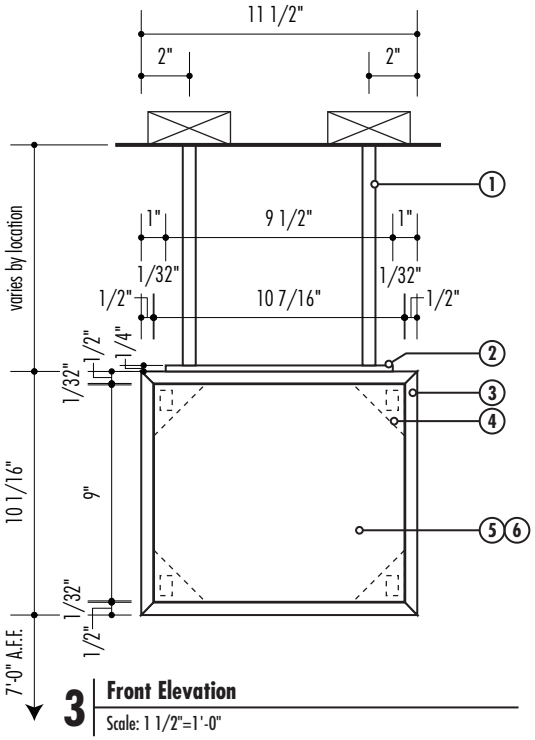

3 **Front Elevation**
Scale: 1 1/2"=1'-0"

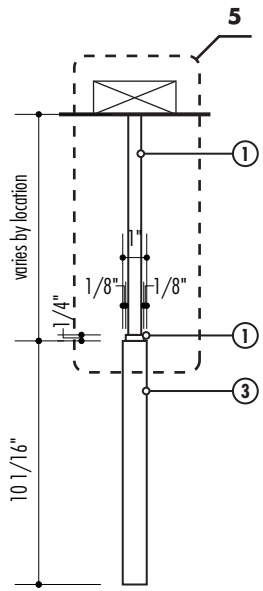

4 **Side Elevation**
Scale: 1 1/2"=1'-0"

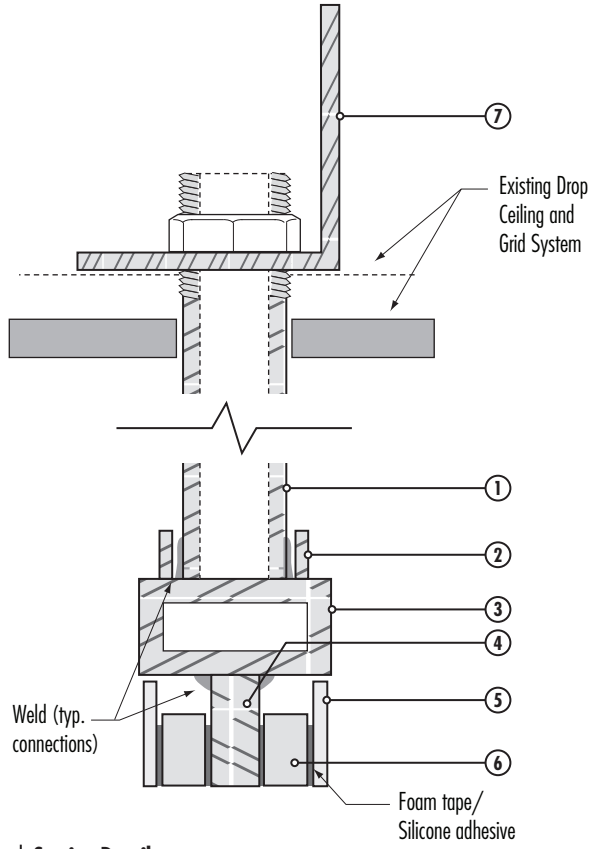

5 **Section Detail**
Scale: Full Size

1. 1/4" diameter schedule 40 pipe (.54" O.D.) painted to match P-33 Frame Silver, threaded on one end.
2. 1/4" aluminum top plate painted to match P-33 Frame Silver with routed center section to conceal weld.
3. 1" x 1/2" aluminum frame painted to match P-33 Frame Silver.

   Sign to be located at 7'- 0" to the bottom A.F.F.
4. 1/4" aluminum corner gusset.
5. 1/16" acrylic message panel painted to match P-12 Dark Gray. Provide necessary internal supports to keep panel from buckling or warping.
6. 1/4" acrylic build-up to hold digital print flush to frame.
7. Aluminum mounting angle above ceiling.
8. Applied vinyl text and symbols to match V-2 White. Font: ITC Franklin Gothic Std Demi Condensed.

Babendure Design Group
8140 Walnut Hill Ln. #950
Dallas, Texas 75231
214.265.1960
www.babendure.com

University Medical Center of El Paso
El Paso Children's

8th Floor Build Out
Contract Drawings

Date	Issued
06.12.24	For Bid

Design Intent Drawings

©Babendure Design Group. All rights reserved. No part of this document may be reproduced or utilized in any form without prior written authorization from Babendure Design Group. This document serves as a device to communicate design intent only. Fabrication and installation of all products represented herein will be derived from the shop drawings produced by the project's contracted fabricator.

INT.115.2
Flag Identity, Small, Hanging

6 **Plan View**
Scale: 3"=1'-0"

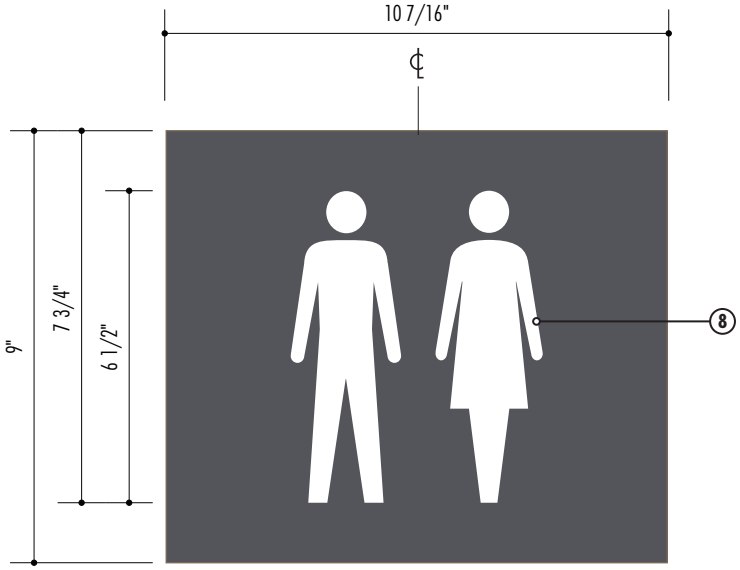

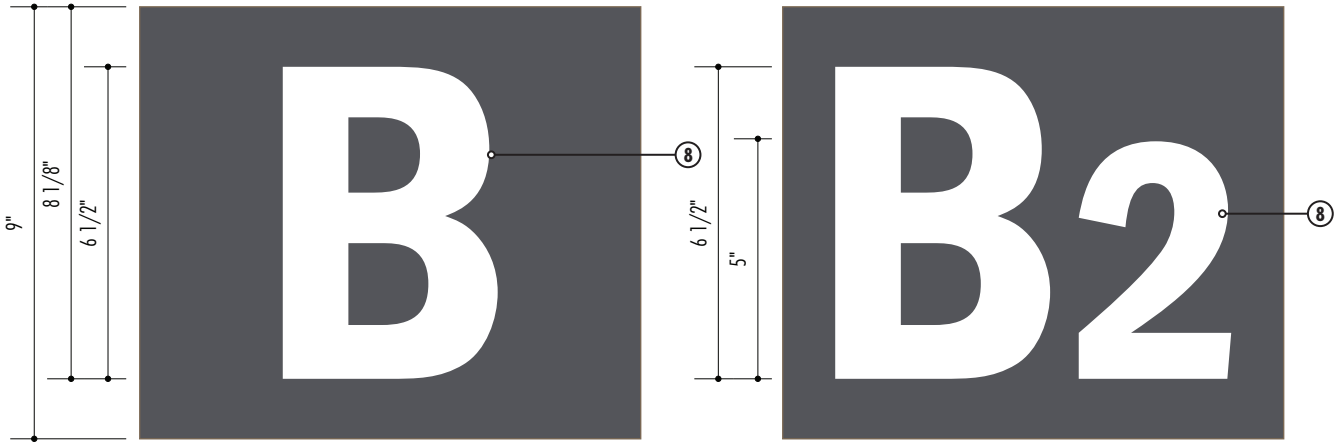

7 **Text Layout**
Scale: 3"=1'-0"

1. 1/4" diameter schedule 40 pipe (.54" O.D.) painted to match P-33 Frame Silver, threaded on one end.
2. 1/4" aluminum top plate painted to match P-33 Frame Silver with routed center section to conceal weld.
3. 1" x 1/2" aluminum frame painted to match P-33 Frame Silver.

   Sign to be located at 7'- 0" to the bottom A.F.F.
4. 1/4" aluminum corner gusset.
5. 1/16" acrylic message panel painted to match P-12 Dark Gray. Provide necessary internal supports to keep panel from buckling or warping.
6. 1/4" acrylic build-up to hold digital print flush to frame.
7. Aluminum mounting angle above ceiling.
8. Applied vinyl text and symbols to match V-2 White. Font: ITC Franklin Gothic Std Demi Condensed.

Babendure Design Group
8140 Walnut Hill Ln. #950
Dallas, Texas 75231
214.265.1960
www.babendure.com

University Medical Center of El Paso
El Paso Children's

8th Floor Build Out
Contract Drawings

Date	Issued
06.12.24	For Bid

Design Intent Drawings

©Babendure Design Group. All rights reserved. No part of this document may be reproduced or utilized in any form without prior written authorization from Babendure Design Group. This document serves as a device to communicate design intent only. Fabrication and installation of all products represented herein will be derived from the shop drawings produced by the project's contracted fabricator.

INT.115.2
Flag Identity, Small, Hanging

Babendure Design Group
8140 Walnut Hill Ln. #950
Dallas, Texas 75231
214.265.1960
www.babendure.com

SPECIAL ELEVATIONS

University Medical Center of El Paso
El Paso Children's

8th Floor Build Out
Contract Drawings

Side A

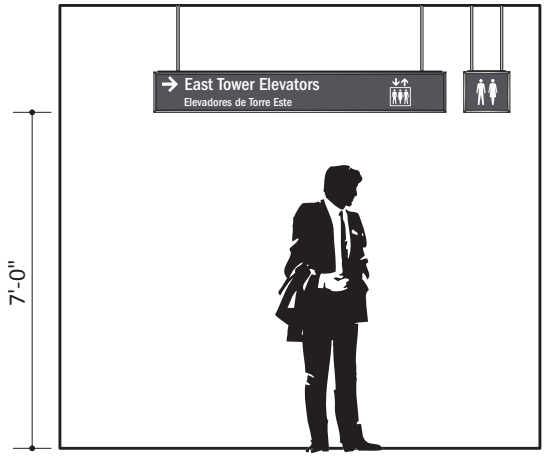

Side B

1 LOCATION W801 & 08012A

Scale: 1/4"=1'-0"

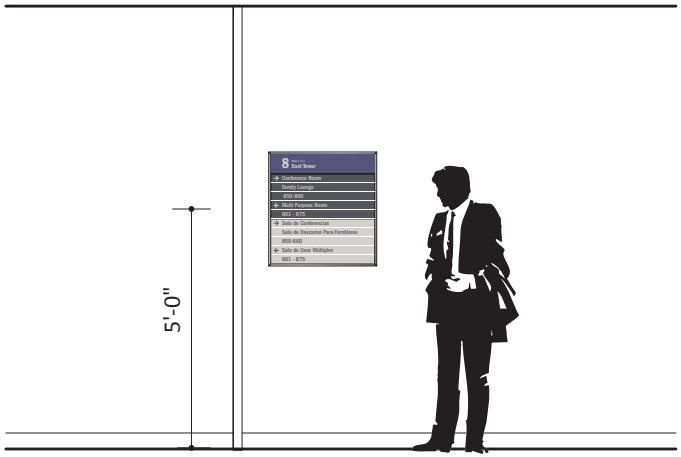

2 LOCATION W802

Scale: 1/4"=1'-0"

Babendure Design Group
8140 Walnut Hill Ln. #950
Dallas, Texas 75231
214.265.1960
www.babendure.com

University Medical Center of El Paso
El Paso Children's

8th Floor Build Out
Contract Drawings

Date	Issued
06.12.24	For Bid

Design Intent Drawings

©Babendure Design Group. All rights reserved. No part of this document may be reproduced or utilized in any form without prior written authorization from Babendure Design Group. This document serves as a device to communicate design intent only. Fabrication and installation of all products represented herein will be derived from the shop drawings produced by the project's contracted fabricator.

Special Elevations 1

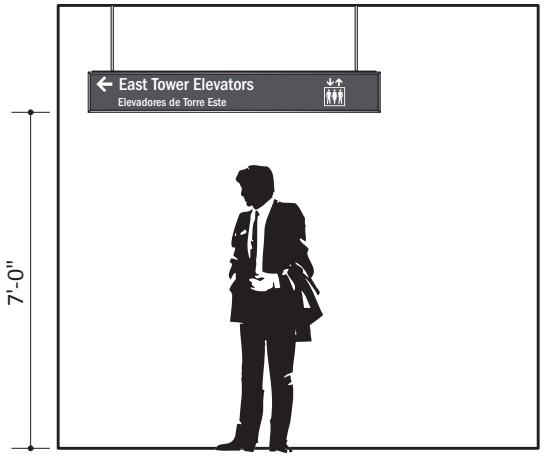

Side A

Side B

3 **LOCATION W803**
Scale: 1/4"=1'-0"

4 **LOCATION W804**
Scale: 1/4"=1'-0"

Babendure Design Group
8140 Walnut Hill Ln. #950
Dallas, Texas 75231
214.265.1960
www.babendure.com

University Medical Center of El Paso
El Paso Children's

8th Floor Build Out
Contract Drawings

Date	Issued
06.12.24	For Bid

Design Intent Drawings

©Babendure Design Group. All rights reserved. No part of this document may be reproduced or utilized in any form without prior written authorization from Babendure Design Group. This document serves as a device to communicate design intent only. Fabrication and installation of all products represented herein will be derived from the shop drawings produced by the project's contracted fabricator.

Special Elevations 2

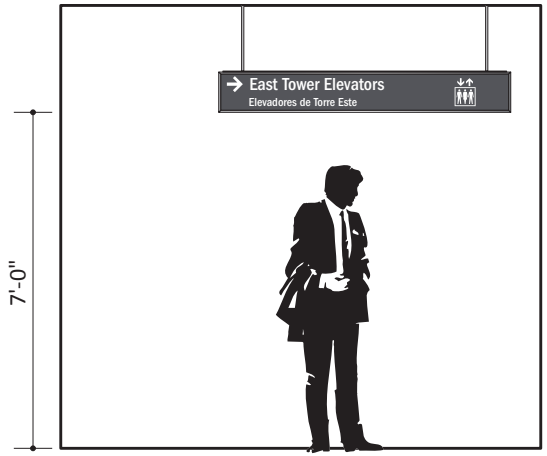

Side A

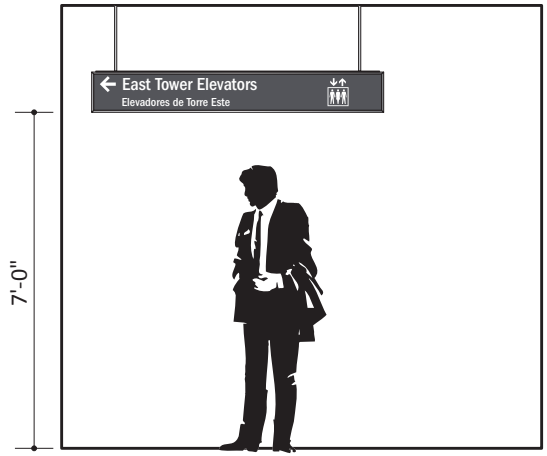

Side B

5 **LOCATION W807**
Scale: 1/4"=1'-0"

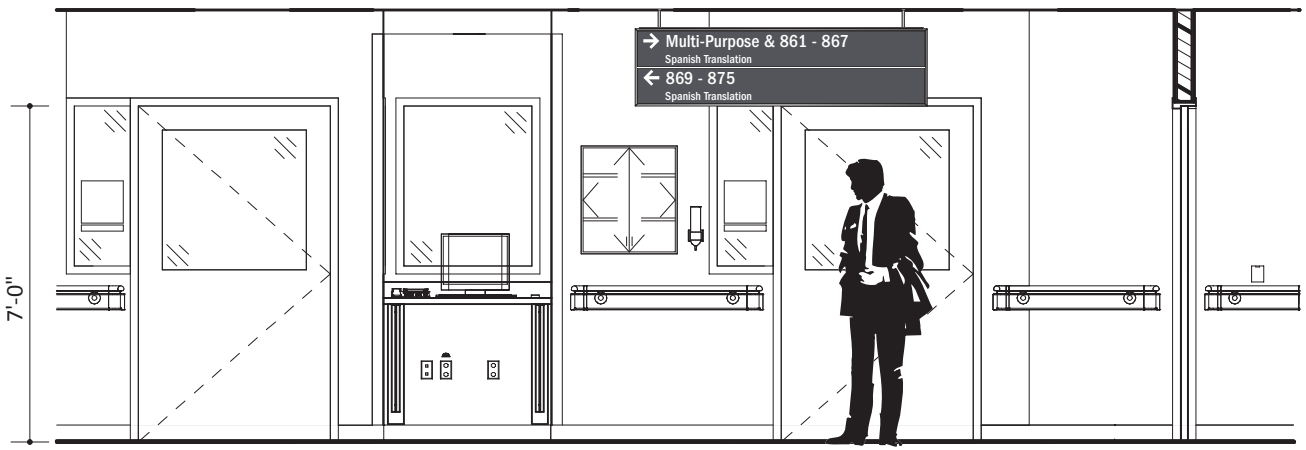

6 **LOCATION W808**
Scale: 1/4"=1'-0"

Babendure Design Group
8140 Walnut Hill Ln. #950
Dallas, Texas 75231
214.265.1960
www.babendure.com

University Medical Center of El Paso
El Paso Children's

8th Floor Build Out
Contract Drawings

Date	Issued
06.12.24	For Bid

Design Intent Drawings

©Babendure Design Group. All rights reserved. No part of this document may be reproduced or utilized in any form without prior written authorization from Babendure Design Group. This document serves as a device to communicate design intent only. Fabrication and installation of all products represented herein will be derived from the shop drawings produced by the project's contracted fabricator.

Special Elevations 3

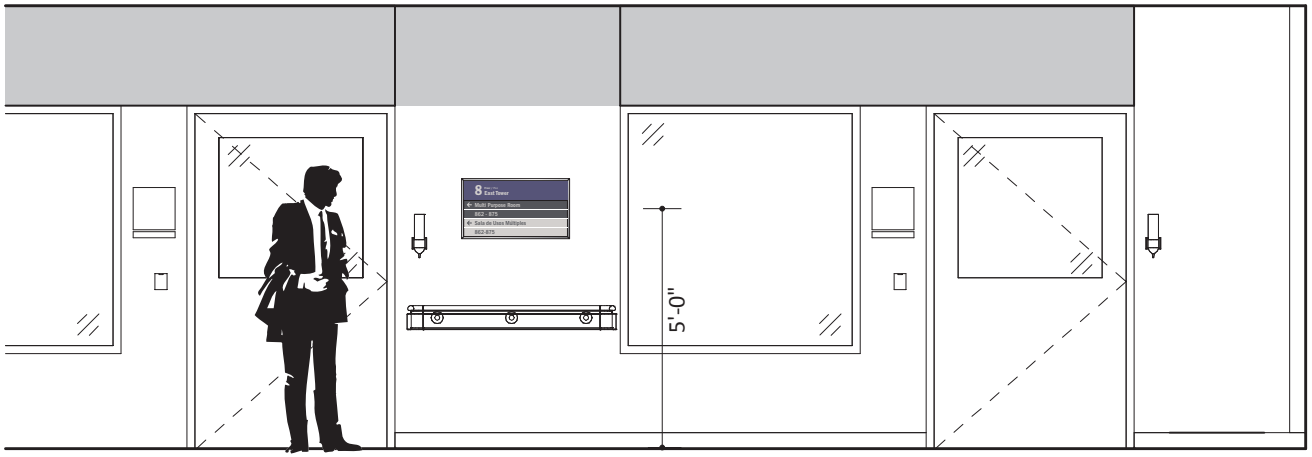

7 LOCATION W809

Scale: 1/4"=1'-0"

Babendure Design Group
8140 Walnut Hill Ln. #950
Dallas, Texas 75231
214.265.1960
www.babendure.com

University Medical Center of El Paso
El Paso Children's

8th Floor Build Out
Contract Drawings

Date	Issued
06.12.24	For Bid

Design Intent Drawings

©Babendure Design Group. All rights reserved. No part of this document may be reproduced or utilized in any form without prior written authorization from Babendure Design Group. This document serves as a device to communicate design intent only. Fabrication and installation of all products represented herein will be derived from the shop drawings produced by the project's contracted fabricator.

Special Elevations 4

Babendure Design Group
8140 Walnut Hill Ln. #950
Dallas, Texas 75231
214.265.1960
www.babendure.com

BUILDING DIRECTORY LAYOUT

University Medical Center of El Paso
El Paso Children's

8th Floor Build Out
Contract Drawings

El Paso Children's

		Floor	Elevator/Building
Admissions		1	East Tower
Chemotherapy / Infusion Center		7	North Tower
Children's Emergency		1	Thomason Tower
Children's Outpatient Services		1	North Tower
· Cardiac Services			
· CT			
· Echo			
· EEG / EKG			
· Holter			
· MRI			
· North Tower Elevators			
· Nuclear Medicine			
· Outpatient Laboratory			
· Pulmonary Function			
· Radiology (XRAY)			
· Registration			
· Stress Test			
· Ultrasound			
Children's Rehabilitation		B	East Tower
· Audiology			
· Occupational Therapy			
· Physical Therapy			
· Speech-Language Pathology			
Enrollment Services / HHSC		1	East Tower
Human Resources		B	North Tower
Medical Records		B	East Tower
NICU		6	East Tower
Patient Rooms 750-773	HEM /ONC	7	East Tower
Patient Rooms 850-875	General Children's	8	East Tower
Patient Rooms 950-975	General Children's	9	East Tower
Patient Rooms 1050-1071	PICU	10	East Tower
Surgery Waiting		2	North Tower

	Floor	Elevator/Building
Cashier	1	East Tower
Gift Shop	1	East Tower
Guest Services	1	East Tower
· Lost / Found		
· Volunteers		
Information	1	East Tower
Meditation Room	1	East Tower

Food & Drink

UMC Cafeteria	B	Thomason Tower
Java Stop	1	East Tower
Children's Bistro	B	East Tower

El Paso Children's

		Piso	Elevador/Edificio
Admisiones		1	Torre Este
Quimioterapia / Centro De Infusión		7	Torre Norte
Emergencias Infantiles		1	Torre Thomason
Servicios Ambulatorios Infantiles		1	Torre Norte
· Servicios de Cardiología			
· Tomografía Computarizada (CT)			
· Ecocardiografía			
· Electroencefalografía (EEG) / Electrocardiografía (EKG)			
· Holter			
· Resonancia Magnética (MRI)			
· Elevadores de Torre Norte			
· Medicina Nuclear			
· Laboratorio Para Pacientes Ambulatorios			
· Funcionamiento Pulmonar			
· Radiología Diagnóstica (Rayos-X)			
· Registro			
· Prueba de Esfuerzo			
· Ultrasonido			
Rehabilitación Infantil		B	Torre Este
· Audiología			
· Terapia Ocupacional			
· Terapia Física			
· Patología del Lenguaje y del Habla			
Unidad de Servicios de Inscripción / HHSC		1	Torre Este
Recursos Humanos		B	Torre Norte
Registros Médicos		B	Torre Este
NICU		6	Torre Este
Cuartos de Pacientes 750-773	HEM /ONC	7	Torre Este
Cuartos de Pacientes 850-875	Pediatría en General	8	Torre Este
Cuartos de Pacientes 950-975	Pediatría en General	9	Torre Este
Cuartos de Pacientes 1050-1071	PICU	10	Torre Este
Sala de Espera Para Cirugía		2	Torre Norte

	Piso	Elevador/Edificio
Caja	1	Torre Este
Tienda de Regalos	1	Torre Este
Servicios Para Huéspedes	1	Torre Este
· Artículos Extraviados		
· Voluntarios		
Información	1	Torre Este
Sala De Meditación	1	Torre Este

Alimentos y Bebidas

UMC Cafeteria	B	Torre Thomason
Java Stop	1	Torre Este
Children's Bistro	B	Torre Este

Babendure Design Group
8140 Walnut Hill Ln. #950
Dallas, Texas 75231
214.265.1960
www.babendure.com

University Medical Center of El Paso
El Paso Children's

8th Floor Build Out
Contract Drawings

Date	Issued
06.12.24	For Bid

Design Intent Drawings

©Babendure Design Group. All rights reserved. No part of this document may be reproduced or utilized in any form without prior written authorization from Babendure Design Group. This document serves as a device to communicate design intent only. Fabrication and installation of all products represented herein will be derived from the shop drawings produced by the project's contracted fabricator.

Building Directory Children's Replacement Panels